NO. 35 NOTES FROM THE SHOP $2.50

Woodsmith®

Woodsmith®

Number 35 Sept/Oct, 1984

Editor
Donald B. Peschke

Design Director
Ted Kralicek

Assistant Editors
Steve Krohmer
Douglas L. Hicks

Art Director
Kay Mulder

Technical Illustrators
David Kreyling
Mike Henry

Subscription Manager
Sandy J. Baum

Subscription Assistants
Christel Miner
Vicky Robinson
Jackie Stroud
Shirley Feltman
Ann Williams
Diana Starr

Computer Operations
Ken Miner

Circulation Manager
Jeff Farris

Administrative Assistant
Cheryl Scott

Building Maintenance
Archie Krause

WOODSMITH (ISSN 0164-4114) is published bimonthly (January, March, May, July, September, November) by Woodsmith Publishing Co., 2200 Grand Ave., Des Moines, Iowa 50312.
WOODSMITH is a registered trademark of the Woodsmith Publishing Co.
©**Copyright 1984** by Woodsmith Publishing Co. All Rights Reserved.
Subscriptions: One year (6 issues) $10, Two years (12 issues) $18. Single copy price, $2.50 (Canada and Foreign: add $2 per year.)
Change Of Address: Please be sure to include both your old and new address.
Second class postage paid at Des Moines, Iowa.
Postmaster: Send change of address notice, Form 3579, to Woodsmith Publishing Co., 2200 Grand Ave., Des Moines, Iowa 50312.

BACK ISSUES

All back issues of *Woodsmith* are still available. Send for a booklet describing the contents and prices of all back issues.

SAMPLE COPIES

If you have a friend who would like to see a copy of **Woodsmith**, just send the name and address, and we'll send a sample (at no cost).

Sawdust

ABOUT THIS ISSUE. Wooden toys aren't what they used to be. Gone are the days of simple shapes that can be bandsawn out in countless multiples. Instead, the new toys are beginning to look more like scale models of the real thing. The details and the ingenuity required to work in this small scale presents quite a challenge.

At first, I have to admit I was a little reluctant to build toys with such detail. All the little pieces seemed like too much to handle — too small and too fragile. But the only way I was going to have the toy truck and a biplane I wanted was to build them.

As I began working on these toys, I discovered two things. First, the small parts are not all that difficult to make. Although at times I felt like I was trying to make a toothpick with a chainsaw, I got used to the scale very quickly.

But I also discovered something I hadn't anticipated. The more I worked on the toys, the more I felt the years roll back. It wasn't long before I began to feel like a kid having fun in the shop.

The truck was the most fun. Each little part became a project in itself: making a tilting bed with stake sides that could be removed, and a gas tank with a tiny gas cap, and seats inside the cab. The crowning touch, however was the arched fenders with running boards.

I had seen this type of fender on other toy cars. But I always assumed they were incredibly fragile, and would snap apart with the slightest bump. Not a very good thing to have on a toy.

I made two prototype fenders and found that they were a lot sturdier than I thought they'd be. To give them the full test, I mounted them to one of the early versions of the cab and chassis.

Then with a cringe, I dropped the truck from a height of three feet to the shop floor to see what would happen to the fenders. To my amazement, they didn't break off. In fact, it took several more attempts before the truck landed in just the right way to break off a fender. If it can stand up to that, it should stand up to most of the abuse it's likely to receive.

BOX JOINTS. Besides the toys, there are three other small projects in this issue. All three are joined with box joints.

There seems to be a mysterious attraction to this joint. All it takes is a stroll through any antique store to see the popularity of all the little boxes (and larger crates) that are made with box joints. It seems that if it's a little box that's joined with box joints (not nailed together, mind you), it's worth selling for outrageous amounts of money.

So when I had the jig set up to make box joints for these projects, I made a few more little boxes — nothing fancy, just a box with a lid that's made with box joints.

I made a half dozen or so and gave them away. I don't have the vaguest idea of what they'll be used for, but everyone was delighted to have a little wooden box made with box joints. (Maybe it's just the fact that it wasn't made of plastic, and it wasn't nailed together.)

SOURCEBOOK. For six years we've published *Woodsmith* without any advertising. But that has both its good side and its bad side. Almost everyone likes the fact that they don't have to wade through pages of ads to get to the "good part."

But without ads, a lot of the information about woodworking catalogs and products is hard to find. That's why we decided to publish the *Woodsmith Sourcebook*.

We have tried to make the *Sourcebook* a helpful guide rather than just a collection of ads. We also wanted to provide a way so you could easily order new catalogs and get information about tools and supplies you might be interested in buying.

The first issue of the *Sourcebook* was mailed to all of our subscribers who were on file as of August 31, 1984. We're mailing it out now (in the early fall) to coincide with the introduction of the new catalogs.

I hope you find it helpful. If enough *Woodsmith* subscribers use it to order catalogs and information, we'll publish more (expanded) editions in the future.

NEW FACES. Doug Hicks has joined our editorial department. You may recognize the last name: Clifford Hicks, Doug's father, was editor of Popular Mechanics in the early 60's and until his retirement this year was editor of the P.M. Yearbooks and other special publications.

Doug developed his writing skills by working with his father on the articles about woodworking projects in the past thirteen Yearbooks. In addition, he taught a high school woodworking course for the past five years, and was one of the founders of the Kishwaukee Woodworkers club (see the article on page 24). We're happy to have Doug join us.

MORE NEW FACES. Nine months ago our circulation department got together and decided to take it upon themselves to make a substantial increase in our circulation. This past month, Christel gave birth to Stephanie, 7 lbs. 12 ozs., Sandy gave birth to Jason, 7 lbs. 12 ozs., and Vicky gave birth to Aaron, 7 lbs. 9 ozs.

NEXT MAILING. The November/December issue of *Woodsmith* (No. 36) will be mailed the week of Nov. 26, 1984.

Tips & Techniques

EXACT KERFS FOR SPLINES

Hardboard makes great material for splines since it is very uniform in thickness (⅛"). But how do you get a spline groove the correct size to take the hardboard?

I solved the problem by taking an old steel blade (I used the one that came with my table saw) to a local saw sharpener and had him adjust the tooth set to cut a groove just wide enough to take the hardboard.

George Kavouras
Rosemount, Minnesota

UPRIGHT CLAMPING FIXTURE

Trying to hold a wide board upright in my woodworking vise when I plane end grain or saw dovetails has always been a problem. If I try to tighten the vise too hard it threatens to damage the vise screw and guides.

I built this simple clamp fixture to solve the problem. A wedge is used to clamp the workpiece between the end of the vise and a fixed wedge on the clamp fixture.

To use the clamp fixture, place the edge of the workpiece against the fixed wedge. Then slide the crossbar into the vise until the opposite edge of the workpiece bears

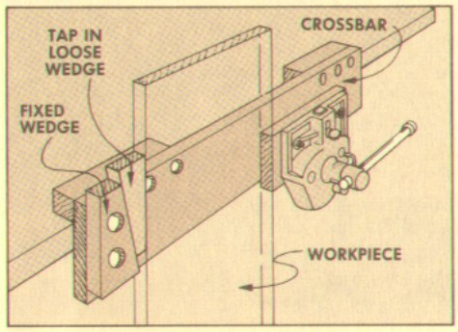

against the side of the vise. Tighten the vise and tap in the loose wedge until the workpiece is held firmly in place.

By making the crossbar of the fixture project at least 1¼" above the top of the bench I can C-clamp the workpiece to the fixture for added strength.

Harry Taylor
Ft. Wayne, Indiana

LARGE AUXILIARY ROUTER BASE

I've found that the base of my hand-held router is often too small to ride over large cavities when making items such as trays. The problem is that the router dips down into the cavity resulting in an uneven cut.

To solve the problem, I removed the existing base plate on the router and replaced it with a large clear ¼" Plexiglas base. The size of the new base depends on the particular job application or the size of the cavity to be bridged. To attach the Plexiglas base to the router, I used the

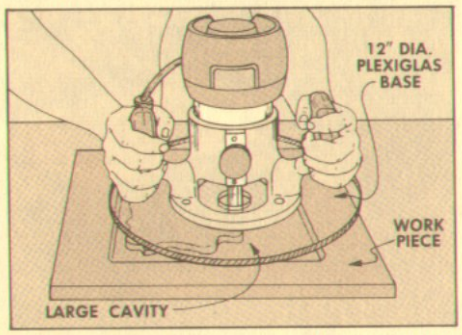

existing base plate as a template for drilling and countersinking the mounting screw holes.

Using clear Plexiglas also allows me to follow a line and see what I am doing.

John A. Hill
Welland, Ontario

SOAP FOR SCREWS?

Soap is often suggested as a lubricant to help when driving screws into hardwood. Unfortunately, soap readily absorbs moisture from the atmosphere. This can lead to rusting that may ruin the appearance of light-colored woods. I have found that beeswax works just as well and won't lead to rusting.

Max Feld
Albuquerque, New Mexico

WIDE PANELS ON THE TABLE SAW

When my router had to go to the shop for repairs I was forced to use my table saw to cut dadoes on some wide panels. Without a roller stand for support I found that I was

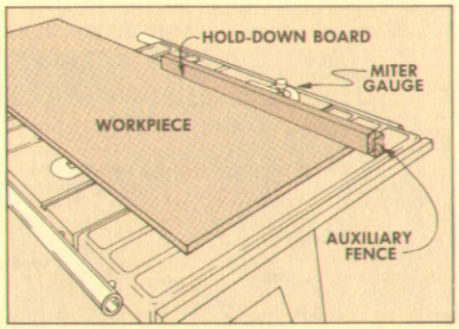

losing control of the panels. The weight of a panel hanging over the end of the saw caused the remaining part of the panel to tip up before the cut could be completed.

To hold the panel flat against the table and tight to the fence, I designed a jig using only two pieces of stock. One piece is securely attached to the miter gauge — similar to any auxiliary fence. The other piece actually holds the workpiece down by fitting right on top of it. Determine the thickness of the workpiece and screw this second board securely to the auxiliary fence so the workpiece will slide in under the top board.

To cut the dadoes on the wide panel, push down on the miter gauge and jig while passing over the blade and completing the cut. As the workpiece passes over the back of the saw's table, the hold-down board helps control the panel and keeps it firmly on the table.

James Bella
St. Johnsville, New York

ROUTING BOARD ENDS

While making dovetail tongues on the ends of long boards with a router table it's difficult to hold the workpiece firmly enough to keep it from wobbling around.

The jig I built consists of three pieces of scrap that securely hold the workpiece upright. The vertical piece must be the same thickness as the workpiece and attached at 90° to the two horizontal pieces.

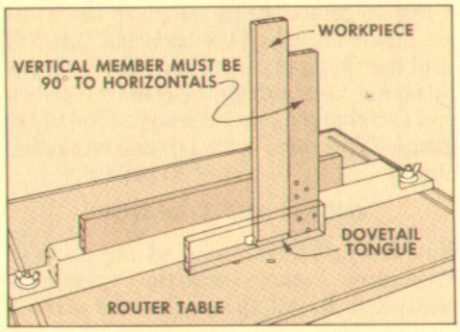

To use the jig, slip the workpiece between the fence and the front board and hold it firmly against the vertical board. This should provide good vertical support and ensure a perpendicular cut.

Bill Loehr
Franktown, Colorado

SEND IN YOUR IDEAS

If you'd like to share a woodworking tip with other readers of *Woodsmith*, send your idea to: *Woodsmith*, Tips & Techniques, 2200 Grand Ave., Des Moines, Iowa 50312.

We pay a minimum of $10 for tips, and $15 or more for special techniques (that are accepted for publication). Please give a complete explanation of your idea. If a sketch is needed, send it along; we'll draw a new one.

Toy Truck

A TOY FOR KIDS, A CHALLENGE FOR ADULTS

It's amazing how the years roll back when you're building wooden toys. This truck started out as a simple design. But as I began to work on it, the kid in me began to take control.

"Boy, wouldn't it be nice," I thought, "if the truck bed tilted up like a dump truck. And then, it could have side stakes on the bed . . . and if the side stakes were removable." It was one thing after another like that, until this truck became a toy that youngsters could play with and adults could appreciate.

THE CHASSIS

Just like on a real truck, this one starts with the chassis, and everything is added to it. To make the chassis, cut a piece of 4/4 stock (13/16" thick actual) 2¼" wide by 11" long, see Fig. 1.

DADOES FOR AXLES. Then, dadoes are cut across the bottom of the chassis to mount the axles. Cut two ½"-wide dadoes near the back for the rear axles and one near the front axle, see spacing in Fig. 1.

Also cut a 1"-wide dado on the top side of the chassis for the foot well, and a ⅜"-wide dado just behind it for back wall of the cab.

NOTCH ON BACK. To complete the chassis, a notch is cut on the back end that will hold the tilting mechanism for the bed. Cut this notch by standing the chassis block on end and clamping it to a fence on the miter gauge. (This same cut was made on the toy airplane, refer to Fig. 9 on page 9.)

ENGINE AND RADIATOR

Now it's just a matter of adding parts to the chassis. I started with the engine compartment. To get the thickness I wanted for this block, I glued a ⅜"-thick piece to a piece of 4/4 stock, see Fig. 2.

Shop Note: When working with these small pieces, it's best to cut them oversize to begin with. Then make any shaping cuts before they're trimmed to final size.

This procedure applies to shaping the engine compartment. After gluing the ⅜"-thick piece to the 4/4 piece, cut the block to width to match the width of the chassis. Then chamfer the top edges to form the engine compartment, and finally, cut the engine to length to fit on the chassis in front of the foot well.

RADIATOR. Now the radiator can be added to the front of the engine. Resaw a piece of stock ¼" thick, and cut it to shape so it sticks out 1/16" from the sides and top of the engine compartment, refer to Fig. 4.

Then drill four ¼" corner holes and cut out the center portion of the radiator with

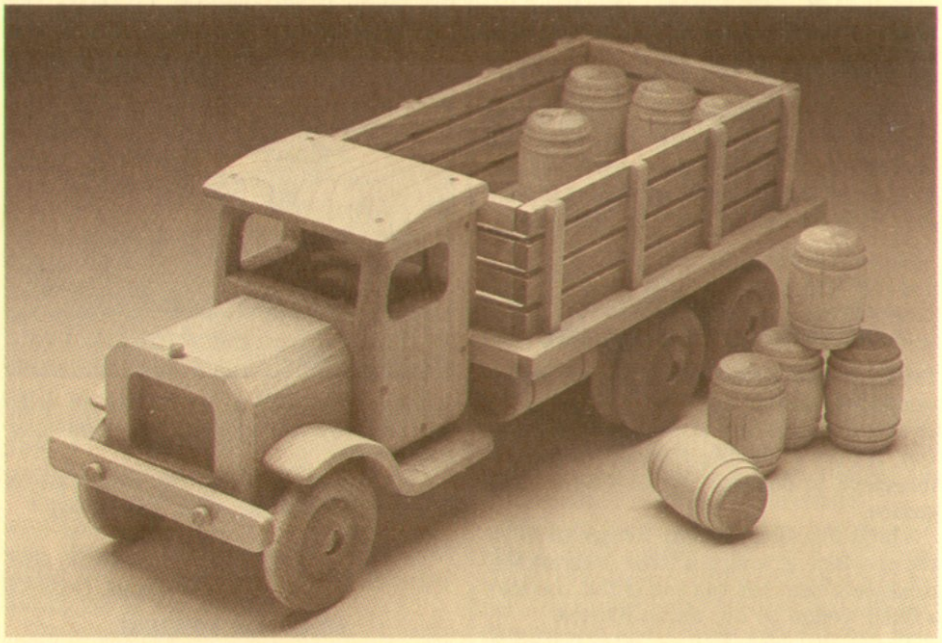

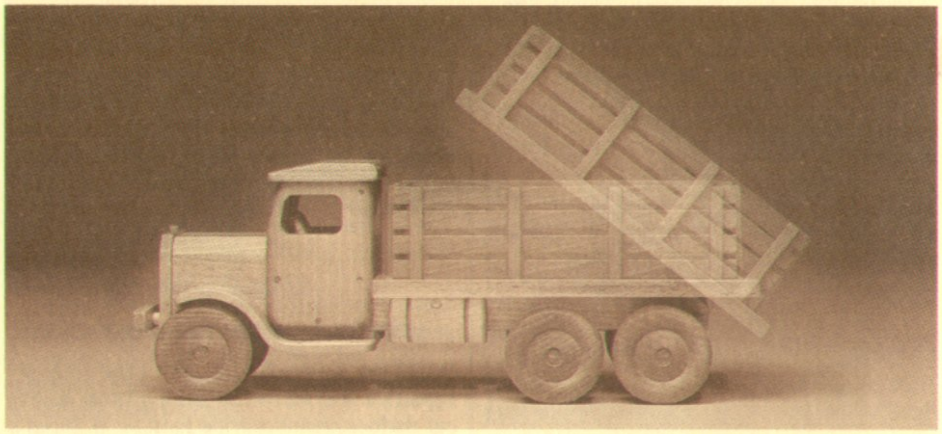

FIGURE 1

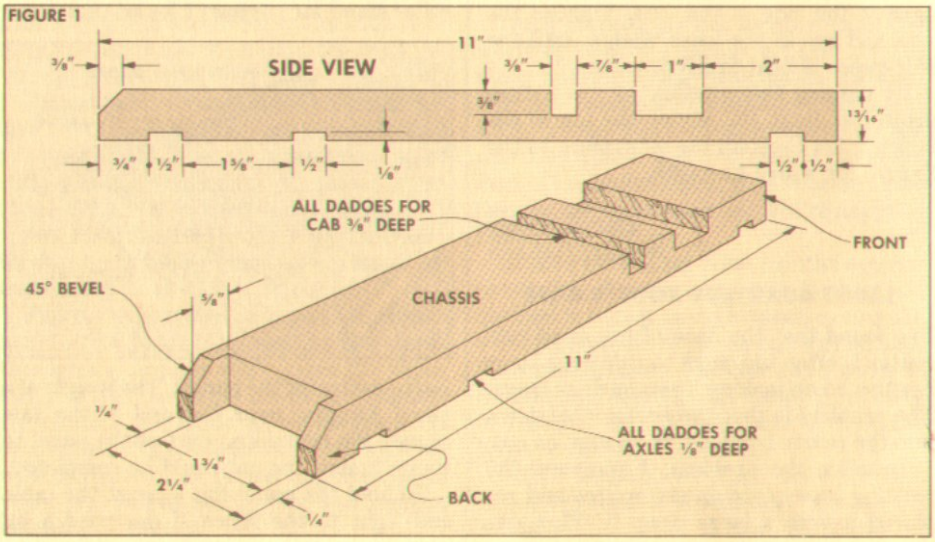

a coping saw, see detail in Fig. 4. I used patternmaker's files to smooth the edges of the cut-out.

GLUE ON RADIATOR. The radiator is glued directly to the front (end grain) of the engine compartment. I wasn't sure at first if this end-grain gluing was going to work. But I found that after holding the pieces together with only finger pressure for about 30 seconds, the glue set up and there was no way to get them apart.

BUMPER. To complete the front end, cut the bumper to size. Then clamp it to the radiator and drill two ¼" holes through the bumper and into the radiator. Put this aside and glue the dowels and bumper in place after the cab is completed.

THE CAB

Now the pieces for the cab can be added to make this start looking like a truck. To make the dashboard and the back of the cab, resaw a strip of stock ⅜" thick (to fit the ⅜" dado in the chassis) and to rough size (2½" wide by 8" long). Then rip this piece down to final width to match the width of the chassis.

THE CAB BACK. For the cab's back, drill four ¼" holes at one end of the strip to form the back window, and cut the window to shape with a coping saw, see detail in Fig. 4. Now cut the back to length so the bottom of the window is 1" above the chassis (see Fig. 3) and glue it in the dado.

DASHBOARD. Use the remainder of this strip to make the dashboard. Drill a ¼" hole in this piece at a 30° angle for the steering wheel column, see Fig. 3. Go ahead and cut the column (a ¼" dowel) and mount the steering wheel (a ⅞"-diameter wheel) to the dashboard. Then glue this assembly to the back of the engine.

THE SEATS. Next, I resawed a ¼"-thick strip 1" wide to make the seats. Round over one edge of this strip and cut the seat cushions to length to match the width of the chassis. Then glue the seats in place in front of the cab's back, see Fig. 3.

THE DOORS. To make the doors, resaw another strip ⅜" thick and drill ¼" holes in the doors to cut out the shape of the windows. Then round the bottom corners (see Fig. 4), and also round over the outside edges, except the top edge.

I had some trouble gluing the doors in place on the first experimental models of this truck because they kept slipping out of position. On this final version I dry-clamped the doors to the cab and drilled ⅛" holes for small dowel pins. Then I applied the glue and used the pins to hold the doors in place while the glue set up.

THE ROOF. To complete the cab, resaw a piece ⅜" thick for the roof and bevel one end at 15° (see Fig. 5). Then cut it to final length to fit on top of the doors, drill ⅛" holes for dowel pins, and glue it to the top of edge of the doors.

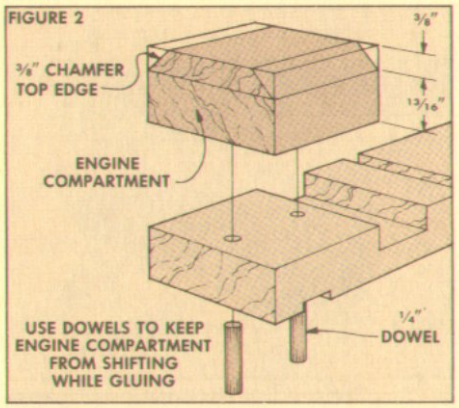

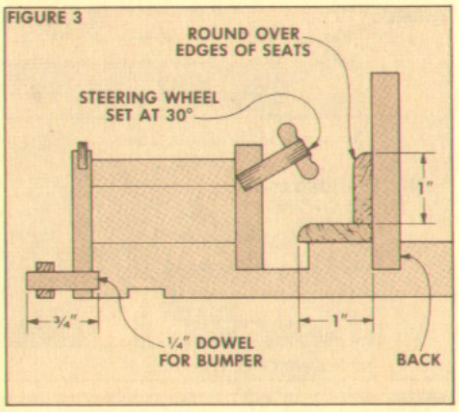

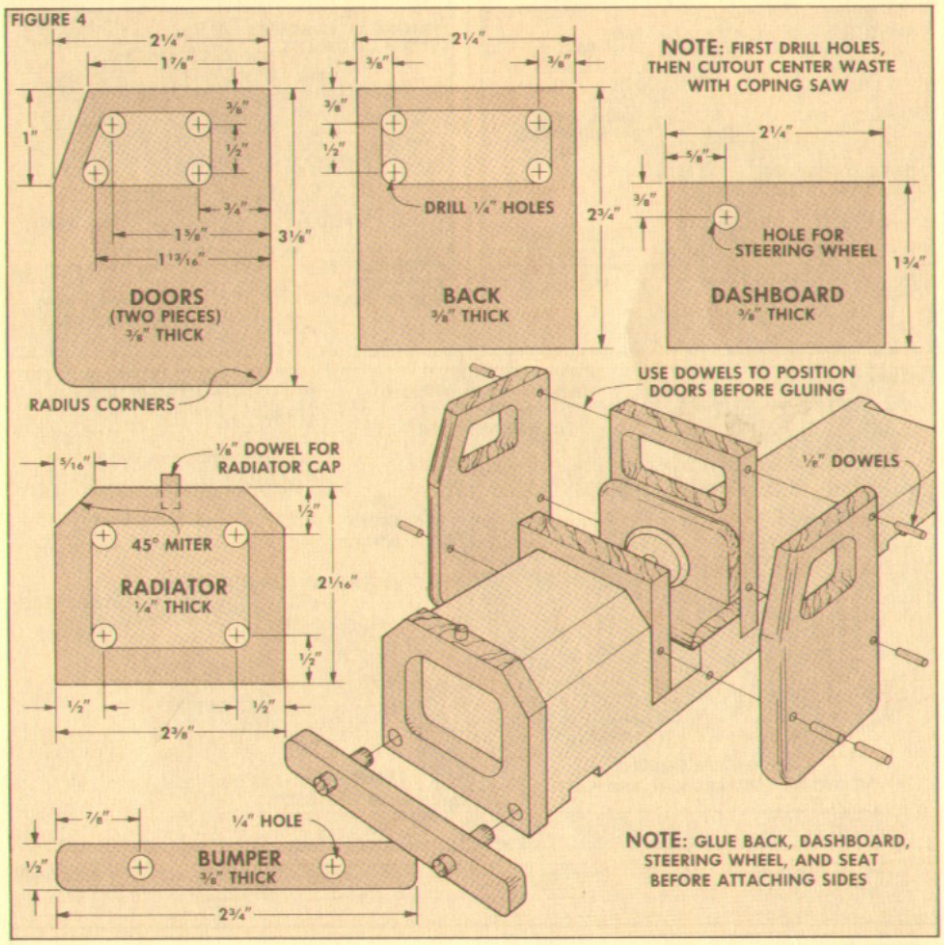

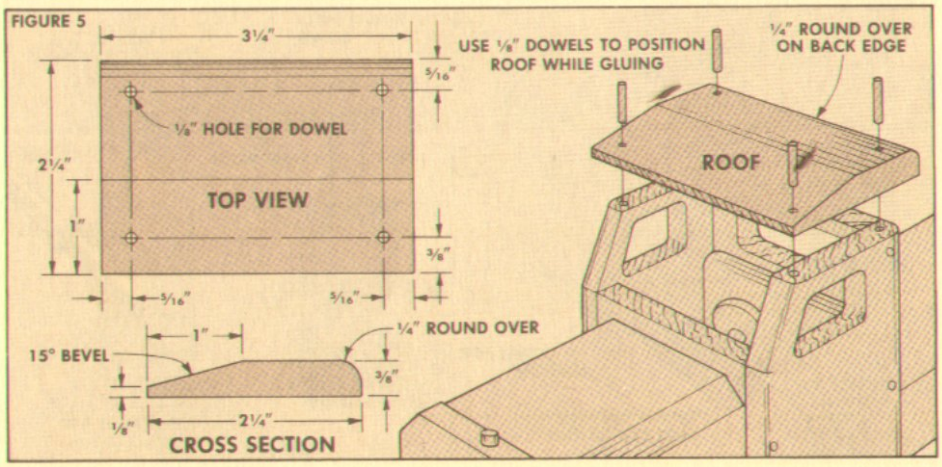

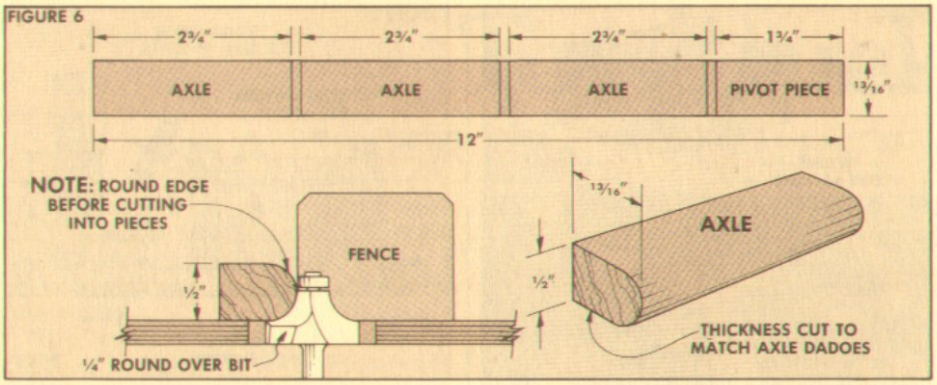

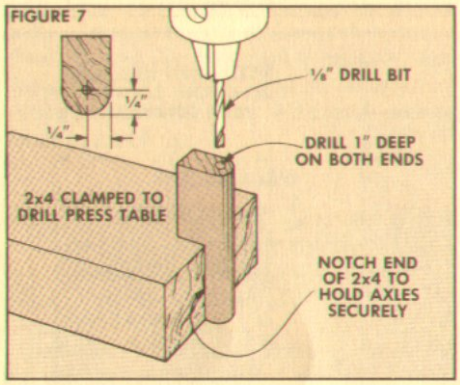

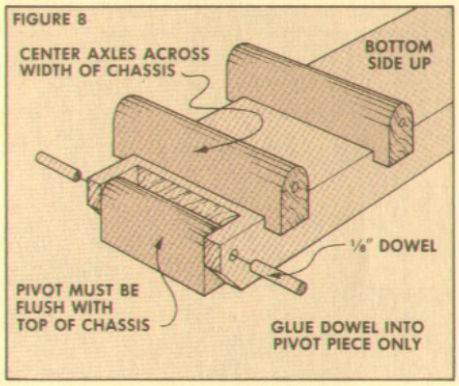

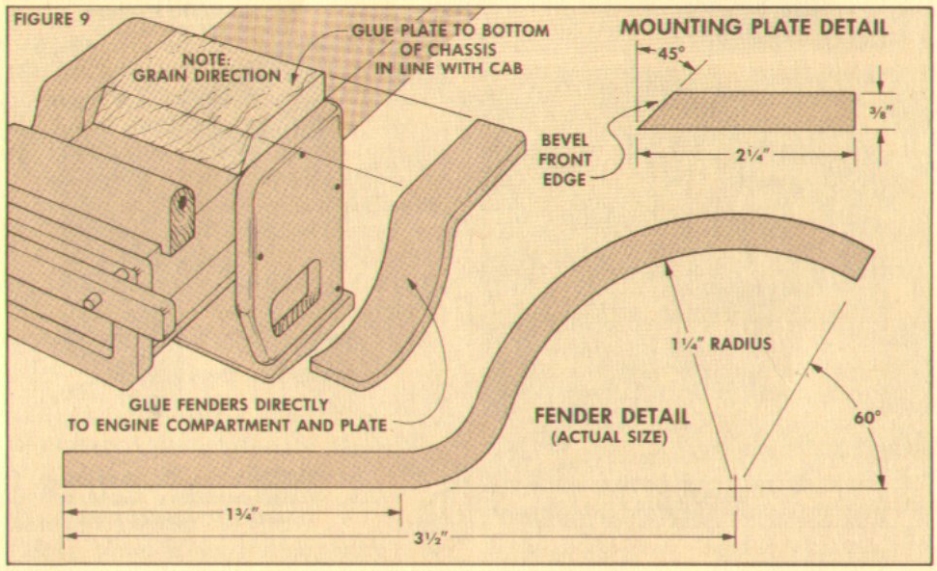

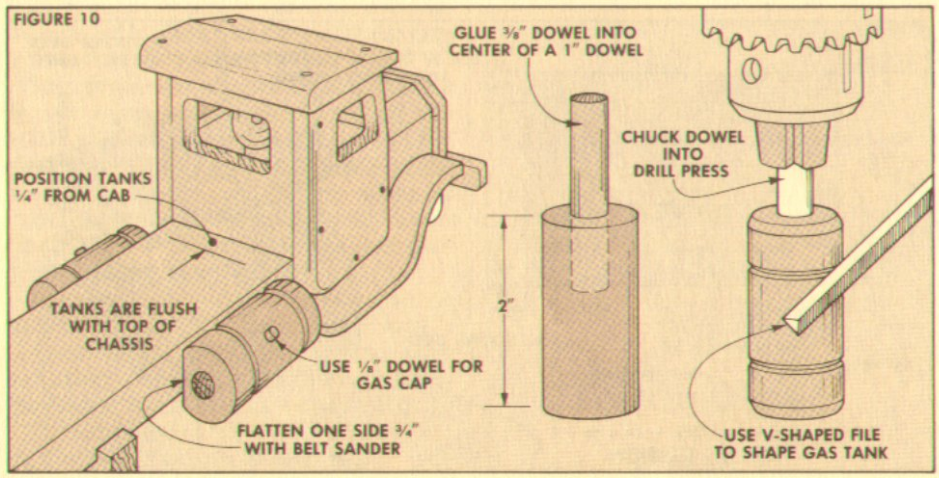

THE AXLES

To make this truck go, it needs some axles and wheels. The axles are made from a ½"-thick strip 12" long, see Fig. 6. Round over two edges of this strip on the router table. Then cut the axles to length so they're a total of ½" (¼" on each side) longer than the chassis is wide.

Also, cut the pivot piece (the piece used to tilt the truck bed) so it fits the notch in the chassis, see Fig. 8.

DRILL HOLES. Next, drill holes in the ends of each axle for the axle rods. To hold them for drilling, cut a notch in the end of a 2x4 (see Fig. 7).

Note: The wheels I used on this truck had ⅛" holes for the axle, so I used 8-penny nails for the axle rods. If you use wheels with ¼" holes in them, the wooden axle rods usually sold with these wheels are not long enough for dual wheels. In this case, make the axles ½" longer (so they stick out a total of ½" on each side), and use only one wheel on each side.

PIVOT PIECE. Go ahead and mount the axles so they stick out an equal amount on each side of the chassis, see Fig. 8. To mount the pivot piece, drill ⅛" holes in the ends of it and in the sides of the chassis. Then put a dab of glue in the pivot piece holes only and slide ⅛" dowels through the holes in the chassis.

THE FENDERS

The fenders on this truck are just like on the real thing: a running board that arches into the fender. When I first cut these fenders to shape, I thought they would be very delicate and break before I ever got them mounted. But they turned out to be a lot tougher than I thought they would be.

There's a full-sized pattern of the fender in Figure 9. Trace this pattern on a piece of 4/4 stock and cut it to shape on a band saw. Then smooth it to shape with a drum sander on a drill press.

MOUNTING PLATE. To mount the fenders, the running board section is actually mounted to a plate that's directly below the cab, see Fig. 9. Cut this plate to size and glue it to the bottom of the chassis.

Now the fenders can be mounted. I thought I'd have to clamp the fenders in place, but I found that clamping really isn't necessary. Just apply glue to the edge of the fenders and hold them in place with finger pressure for about 30 seconds. They won't come off.

GAS TANKS. Next, the truck needs some gas tanks. I made them from 1" dowels by mounting the dowels in the drill press (see Fig. 10), and using a triangular file to form V-grooves at both ends. Then to mount the gas tanks to the sides of the chassis, hold the tank down on a belt sander and sand a ¾"-wide flat side. Also, drill a ⅛" hole for a ⅛" dowel gas cap.

THE TRUCK BED

Things went pretty smooth up to this point . . . until I decided to have side stakes, and have them removable. That presented a challenge. Removable stakes meant I had to make a series of small, square mortises around the perimeter of the truck bed.

I quickly decided there was no way to cut these little mortises the usual way, so I'd have to be sneaky. I started by resawing a piece of stock for the bed ⅜" thick, 4¼" wide by 7¼" long.

Then I cut notches around the edges of the bed and added strips to cover the open ends of the notches — and presto, square mortises, see Figs. 11 and 12.

MOUNT THE BED. At this point I mounted the bed to the pivot piece at the back of the chassis, see Fig. 12. Drill two ⅛" holes for dowel pins. Then clamp the bed to the chassis and drill through these holes into the pivot piece.

Now apply glue to the top edge of the pivot piece, insert ⅛" dowel pins, and hold the bed in place until the glue sets up.

THE STAKE SIDES. Next, I set out to make the stake sides, and quickly decided there were too many little pieces to glue together all at once. Instead, I had to be sneaky again.

First, resaw a piece of ¼"-thick stock 1⅞" wide by 24" long. Then cut off two 7"-long sections for the side fences and two 4"-long sections for the end fences, see Fig. 13. Next, cut ⅛"-deep dadoes for the stakes, making sure these dadoes line up with the mortises in the truck bed.

Now cut the stakes to fit snugly in the dadoes, and ⅜" longer than the fences are wide (so they stick out ⅜" on the bottom edge). Then glue the stakes in the dadoes.

Now here's the tricky part. Set the blade on the table saw to just barely cut through the thickness of the fences, and cut three kerfs on each piece to form the four boards of each fence, see Fig. 14.

MOUNTING THE WHEELS

The last step is to mount the wheels. If you're using wheels with ⅛" holes for the axle rods, use a Forstner bit to drill out a ⅜" counterbore in six wheels to accept the head of the 8-penny nail used for the axle rod, see Fig. 15. Then glue two wheels together for the four back sets.

For the axle rods, clip 6-penny nails to length and score the ends with wire cutters, see Fig. 16. Then slip the nails through the wheels and fasten them in the axles with epoxy.

Note: If wheels with ¼" holes are used, the normal wooden axle rods can be used to mount them to the axles, but only one wheel per side. (The wooden rods aren't long enough for two wheels.)

FINISHING. To finish the truck, I applied two coats of Watco Danish Oil.

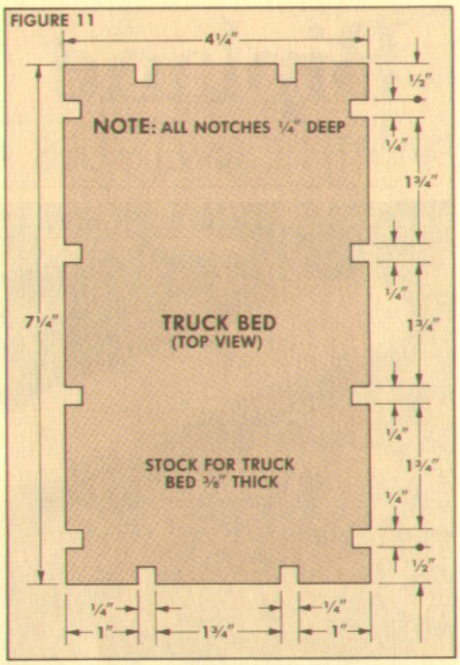

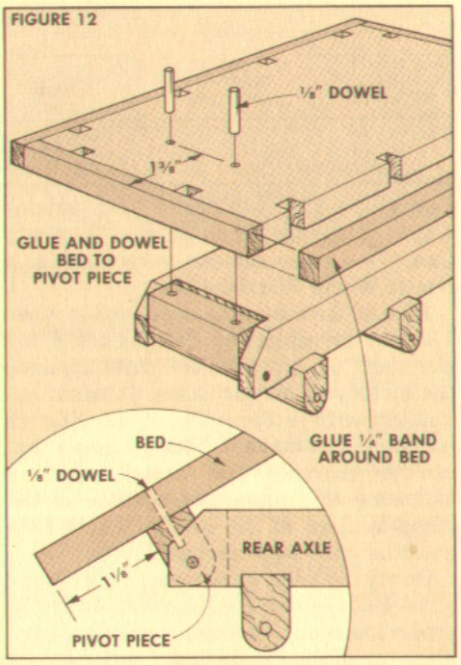

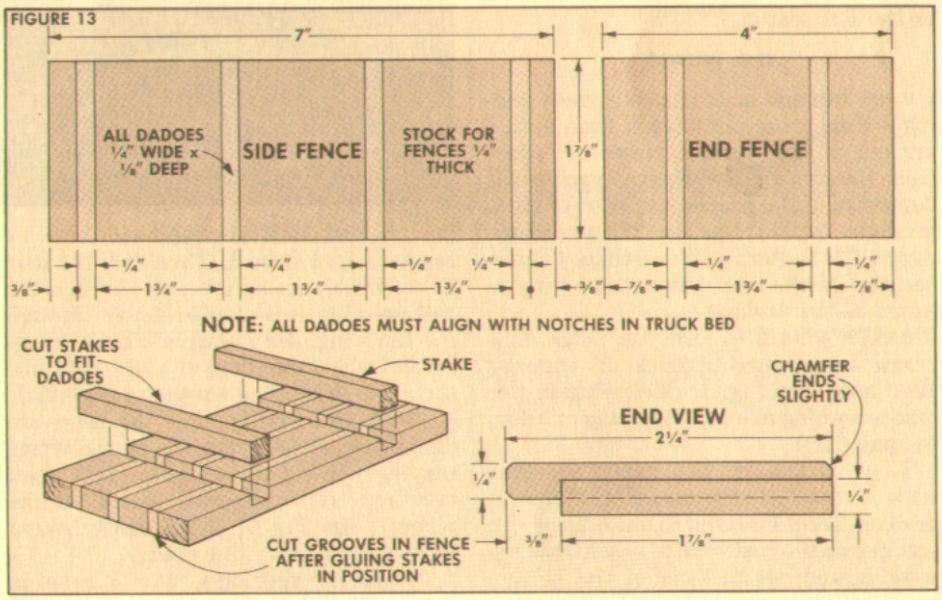

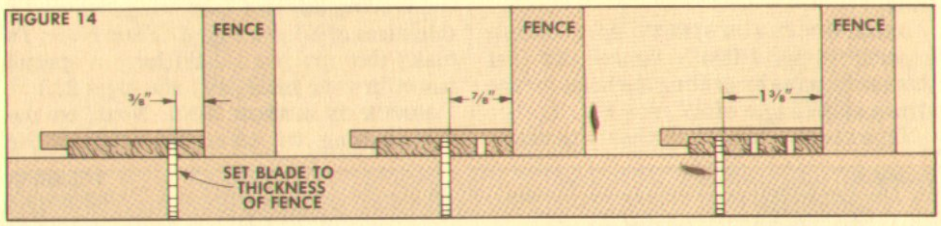

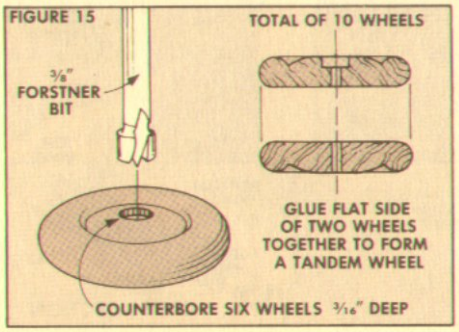

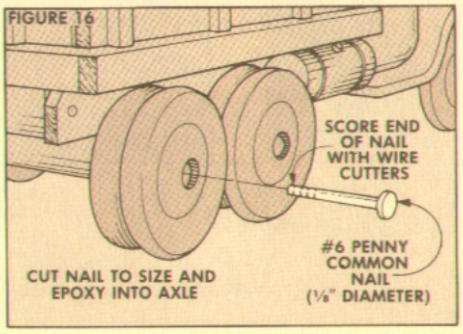

Biplane

THE SOPWITH CAMEL FLIES AGAIN

For years I've wondered why anyone would name an airplane the "Sopwith Camel" — especially one as romantic as a classic World War I biplane.

I found the answer to my question when I began investigating designs for a toy plane and ran across a book that explained the history of old airplanes. It turns out that Sopwith is the name of the English company that made it. Okay, I guess that can't be changed. The "camel" part is a nickname this plane got because of the hump in front of the cockpit where twin machine guns were mounted.

On my toy version, the machine guns are gone. But the sound effects will always be present as soon as someone picks it up and dives out of the clouds in a surprise attack on the Red Baron.

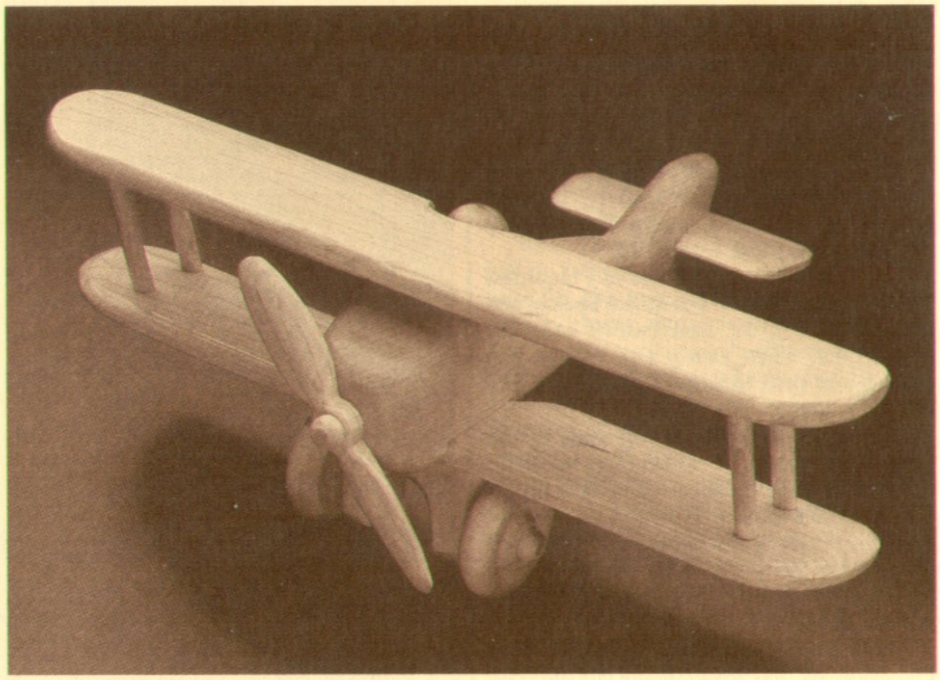

THE WINGS

I went through several prototypes, adding a little more detail each time until I arrived at this design. However, apart from the design, the biggest problem is determining the proper sequence of steps needed to build this plane. The key, I discovered, is to start with the wings. (This is because of the way the bottom wing is joined to the fuselage.)

RESAW WINGS. To form the wings, first resaw two strips ¼"-thick, 2" wide by 10½" long, see Fig. 1. (Resawing in this case is nothing more than ripping on edge, see page 21.)

These two wings are joined together with struts (¼" dowels). But there's a problem here. I wanted to make the wings just like on the real version — with the top wing canted out in front of the bottom wing.

DRILL HOLES FOR STRUTS. After a little experimenting, I finally figured out that this can be done by drilling the holes for the struts at an angle of 25°, see Fig. 1.

Tape the two wings together with masking tape and mark the position of the holes as shown in Figure 1. Then drill the four holes so they go all the way through the bottom wing and stop half-way through the top wing, see Detail in Fig. 1. (Shop Note: To hold the wings at a 25° angle, use the angle-drilling jig shown on page 22.)

SHAPE THE WINGS. After the holes are drilled, the shaping process on the wings can begin. While the wings are still taped together, use a bandsaw to cut off the corners, see Fig. 2. Then gently round these corners on a disk sander.

To form the wing flaps, cut a 13° bevel on the trailing edge of each wing, leaving a thickness of ⅛", see Fig. 3. (Shop Note: To make this cut you should have a special insert in your table saw, see page 22.)

NOTCH ON BOTTOM WING. Next, on the bottom wing, cut an angled notch on the trailing (flap) edge of the wing, see Fig. 4. This notch should be deep enough to remove the beveled portion of the wing (the flap), and wide enough (1⅜") to match the width of the fuselage.

NOTCH ON TOP WING. On the top wing, cut a half-circle notch centered on the length of the wing, see Fig. 5. I cut this ⅝"-radius on a bandsaw and smoothed it with a small drum sander on the drill press.

SAND TO SHAPE. Now the wings can be sanded to final shape. Round over the front edge of both wings on a disk sander. Then sand a slight bevel on the *bottom* side of each wing (below the bevel cut that was made on the table saw) so the trailing edge of the wing flap is narrowed to about 1/16" thick. Finally, sand all surfaces smooth (trying not to remove the crisp angle of the bevel that forms the flaps).

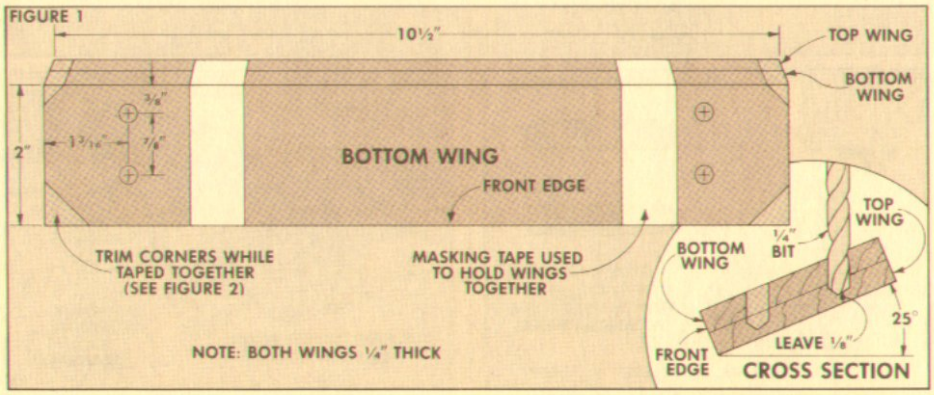

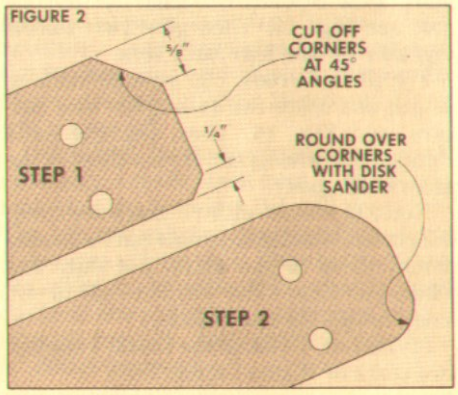

THE FUSELAGE

Now the fuselage can be formed. Once again, this requires quite a few steps that have to be done in the right sequence. It all starts with two patterns: one for the side view of the fuselage, and one for the top view.

We're showing all the dimensions necessary to make these patterns in Figure 7. However, if you don't have the facilities to draw these patterns, you can send for a free copy of the full-size patterns, see Sources, page 24.

Once you have the patterns, make a photocopy (Xerox) or use tracing paper to make another set that can be fastened directly to the block of wood for the fuselage. Shop Note: I used rubber cement (available at art supply stores) to fasten the patterns to the wood.

DRILL HOLES. Before cutting the fuselage to shape, two holes should be drilled. The first hole is for the cockpit on top of the fuselage block. This is a ¾"-diameter hole, ¾" deep, see Fig. 8. Also, drill a 7/32" hole, ¾" deep on the front of the fuselage for the propeller shaft.

NOTCHES. Next, two notches are cut in the fuselage block. First, cut a notch on the bottom of the block to fit the notched area of the bottom wing, see Fig. 8. This notch can be cut by making multiple passes on the table saw.

A second notch is cut on the end of the block for the tail wing. To make this cut, attach an auxiliary fence to the miter gauge and clamp the fuselage block to this fence, see Fig. 9. Use the pattern as a guide to cut a ¼"-wide notch 1⅜" deep.

CUT TO SHAPE. Now the fuselage can be cut to rough shape on a band saw. First cut out the side profile to form the shape of the tail section, the recessed section for the cockpit, and the nose, see Fig. 10.

Next, the fuselage is tapered from the cockpit back to the tail wing. To make these cuts, tape the top view pattern to the top edge of the fuselage block, see Fig. 10. Then make the cuts on the bandsaw so the blade just barely skims along the edge of the pattern. Also trim the corners of the nose area to more of a point.

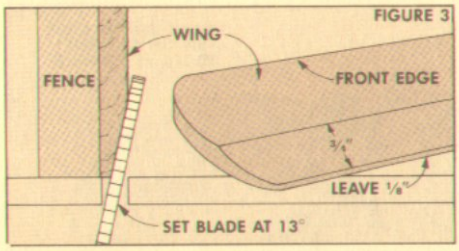

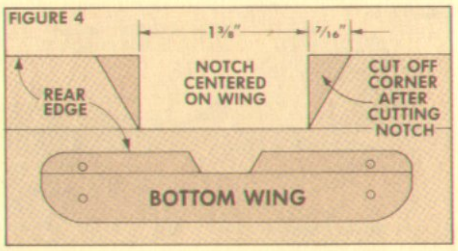

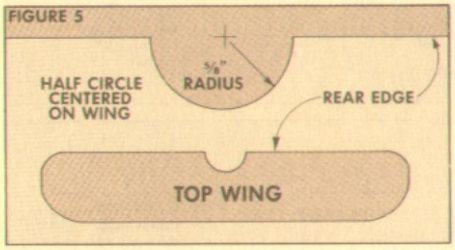

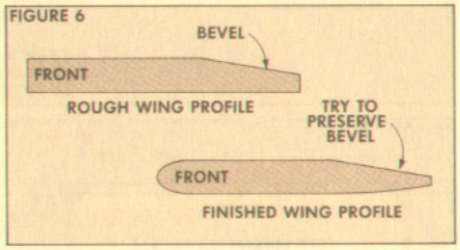

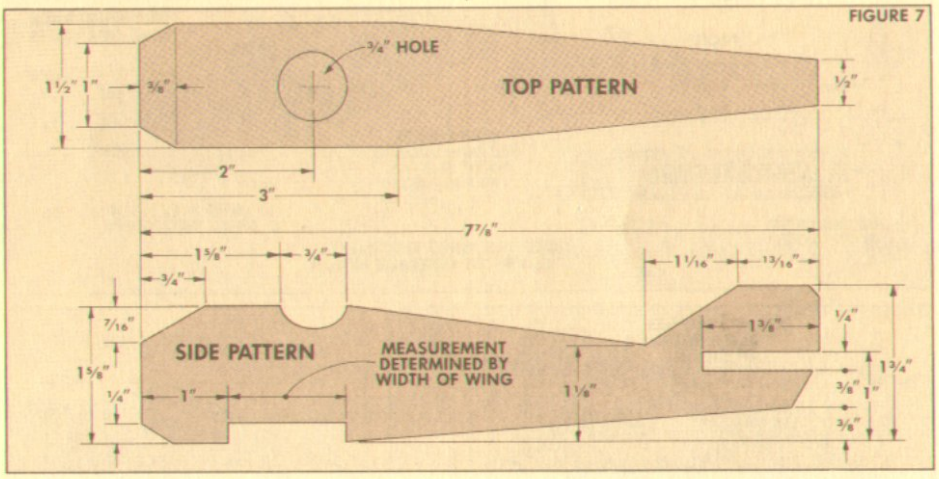

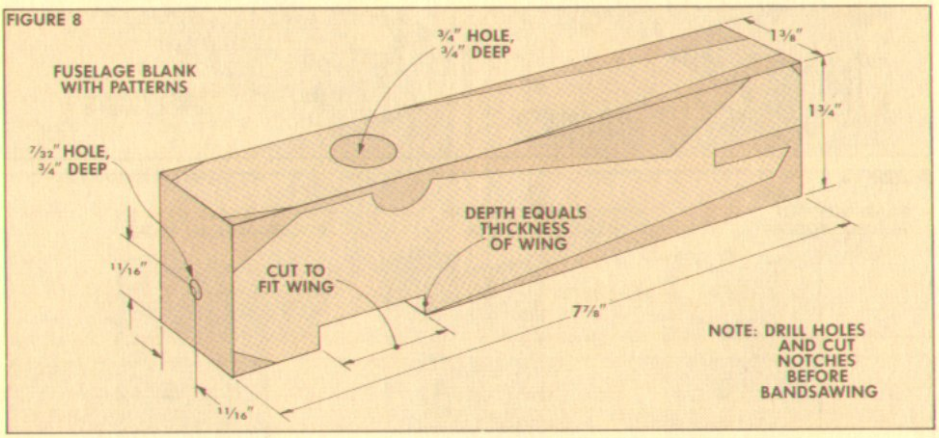

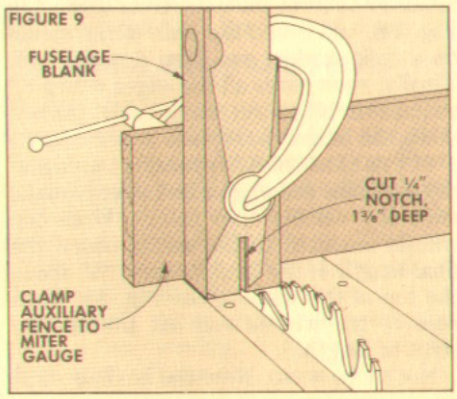

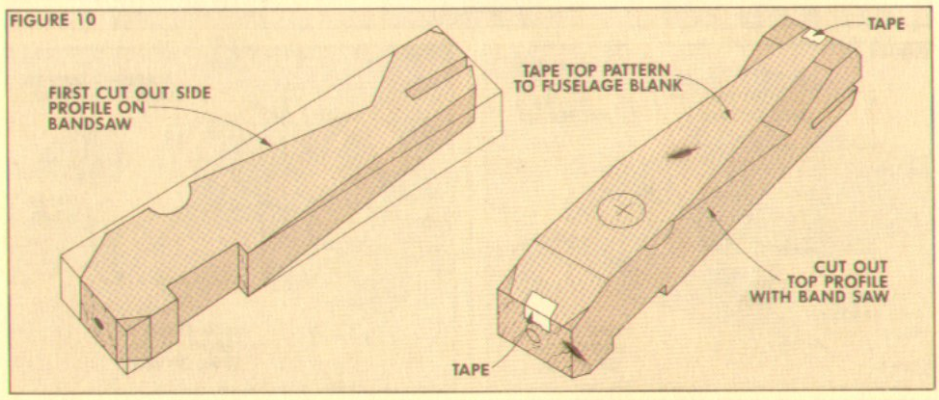

FIGURE 11

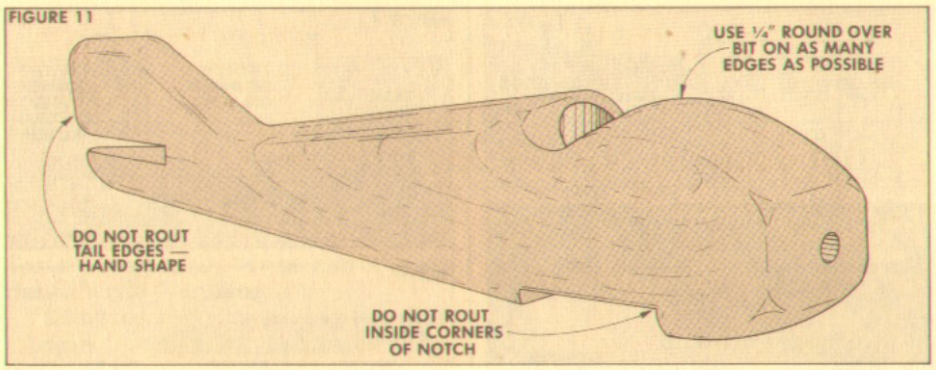

FIGURE 12

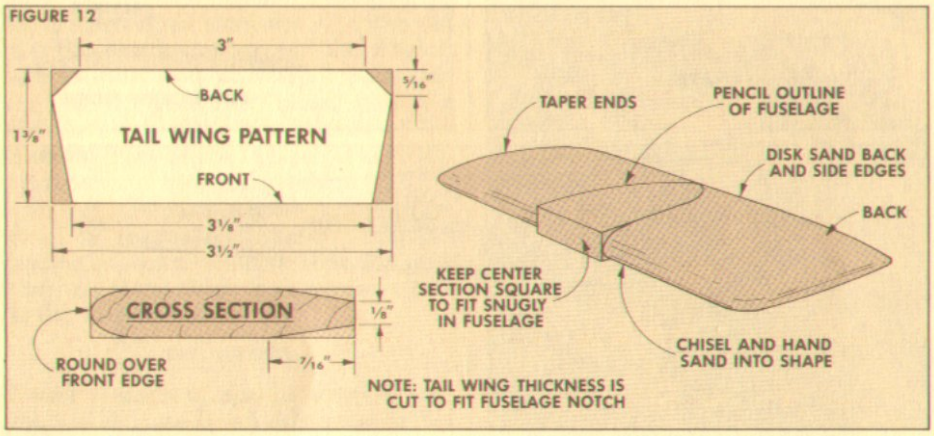

FIGURE 13

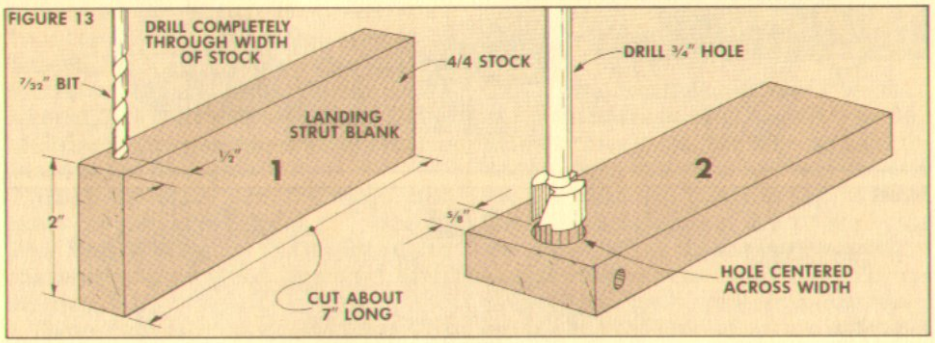

FIGURE 14

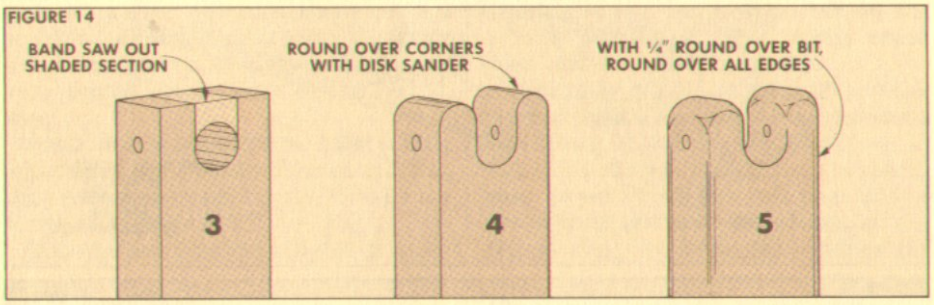

FIGURE 15

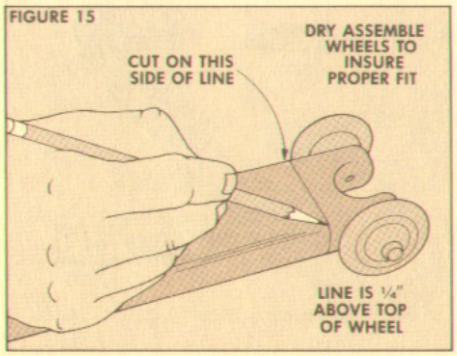

FIGURE 16

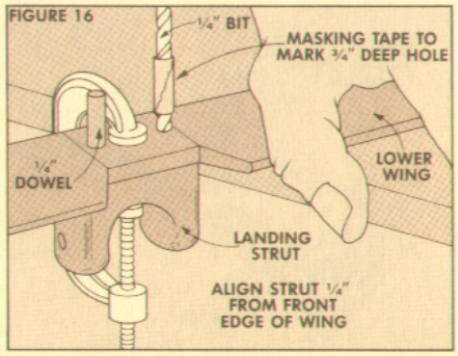

SMOOTH THE FUSELAGE. After the fuselage is cut to rough shape, all surfaces should be sanded to remove the cut marks left by the band saw.

Then all the edges are rounded over. I did this with a ¼" round-over bit on the router table to get to as many edges as possible. However, there are two areas you don't want to rout: the end of the tail (which could be chipped off too easily), and the bottom of the notch for the bottom wing, see Fig. 11.

In order to shape the tail section, I used a file and sanding block, rounding the edges to match the routed edges.

TAIL WING

When the fuselage is smoothed, the tail wing can be formed to shape. First resaw a piece of stock to thickness so it fits snugly into the notch in the tail of the fuselage. (You want it to fit snugly because it can't be clamped when the glue is applied.)

After this piece is resawn to the proper thickness, cut it to size: 1⅜" wide by 3½" long. Before shaping it, slide it in the notch and mark the outline of the fuselage on both the top and bottom.

Now to shape it, first trim the corners on a bandsaw, see Fig. 12. Then use a file, chisel or disk sander to round over the front edge and taper the trailing edges *without* sanding the outlined area.

LANDING GEAR

Working with all these small pieces can be a problem. This was especially true with the landing gear. What I wound up doing was shaping the landing gear at the end of a larger block so it was easier to handle.

Start with a piece of stock 2" wide and about 7" long (or any length that's comfortable to work with). Then drill a 7/32" hole ½" from the end of the stock for the axles, see Fig. 13.

Shop Note: This hole should be sized to fit the wooden axles you have. The axles I used require a 7/32"-diameter hole.

SHAPE THE STRUTS. Next, the end of the block is divided to form the two landing struts. First, bore a ¾" hole centered ⅝" from the end of the block, see Step 2 in Fig. 13. Then cut out the end section on a bandsaw to form the two struts (Step 3 in Fig. 14), and round the ends of the struts on a disk sander, see Step 4 in Fig. 14. Finally, round over all the edges with a ¼" round-over bit on the router table. (This is when the longer workpiece is necessary.)

CUT TO LENGTH. After routing the edges, dry assemble the wheels and axles to make sure the wheels spin freely. With the wheels mounted to the struts, mark the final length of the landing strut ¼" above the top of the wheels, see Fig. 15. Then remove the wheels and cut the landing strut to length.

MOUNT TO WING. Now the landing strut

can be mounted to the bottom wing. Clamp the strut to the wing so it's ¼" back from the front edge of the wing. (Since I didn't want to mar the inside of the strut, I cut a ¾" dowel in half to fit inside the strut as a pad for the clamp.) Drill two ¼" holes through the wing and into the strut, and glue ¼" dowels into the holes.

ASSEMBLY

This wing and landing strut assembly can be mounted to the fuselage, see Fig. 17. As the wing and strut are clamped in place, the tail wing can also be glued into the slot at the end of the fuselage.

When the glue is dry on the tail wing, drill a 45°-angle hole at the bottom of the tail section for the rear landing runner, see Fig. 18. This hole is difficult to drill at an angle. I started with a ⅛" bit and worked up in increments to the 5/16" final size. After the hole is drilled, round off the end of a 5/16" dowel and glue it in place.

THE PROPELLER

I wanted to make the propeller as close to the real thing as possible. This meant shaping a very small piece of wood on a disk sander.

Start by cutting a little strip of wood ¼" thick, 4" long by ¾" wide. Then drill a 9/32" hole (which is 1/16" larger than the wooden axle) centered on the length and width of the strip, see Fig. 19.

To form the shape of the propeller, first cut it to the rough shape shown at the top of Figure 19. Then on a disk sander, gently sand the edges to the rounded shape shown in Step 2.

Now, to form the propeller shape, rough sand half of the front side of each blade to a sharp angle (Step 3). Then sand the other half at a gentle angle, and also sand the back side of the blade at a gentle curve to complete the shape, see Step 4. Refine this shape so the edges feather to a point, see Step 5.

MOUNT PROPELLER. Before mounting the propeller to the fuselage, cut the shaft (wooden axle) to final length and test the propeller on the end of the shaft to make sure it spins freely. (A little wax helps here.) Then mount the propeller on the shaft, put a small dab of glue in the fuselage hole, and push the shaft in place.

MOUNT WINGS AND STRUTS

The last step is to mount the top wing. Cut four struts (¼" dowels) 2¾" long and glue them into the holes in the top wing. Then while the glue is still wet, put a dab of glue in the holes in the bottom wing, and slide the dowels through these holes. Then cut off the excess length and sand the ends of the dowels flush with the wings.

FINISHING. After giving the entire airplane a final sanding, I finished it with three coats of tung oil.

FIGURE 17

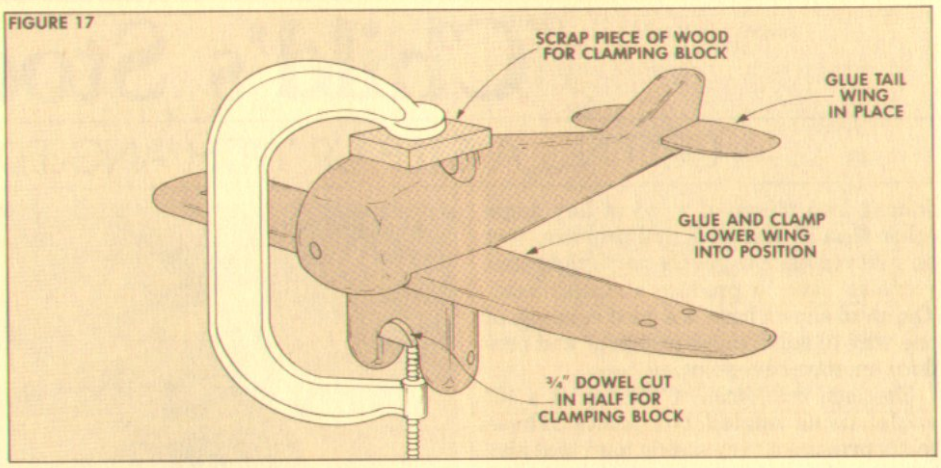

FIGURE 18

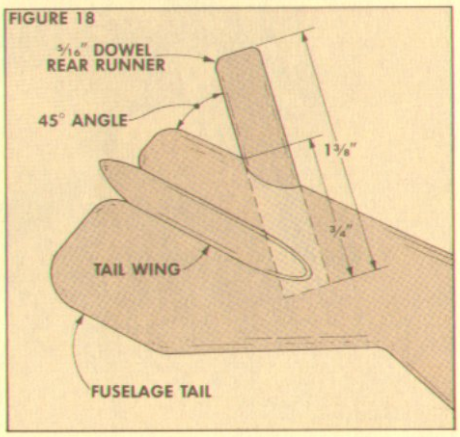

FIGURE 19

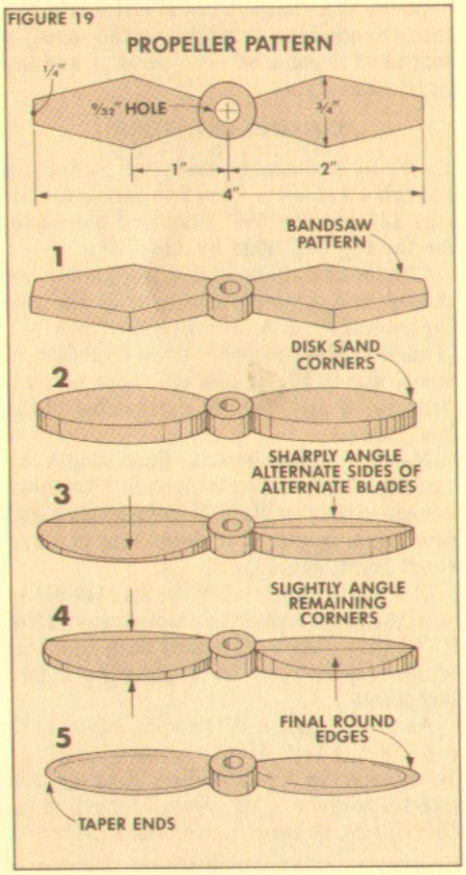

FIGURE 20

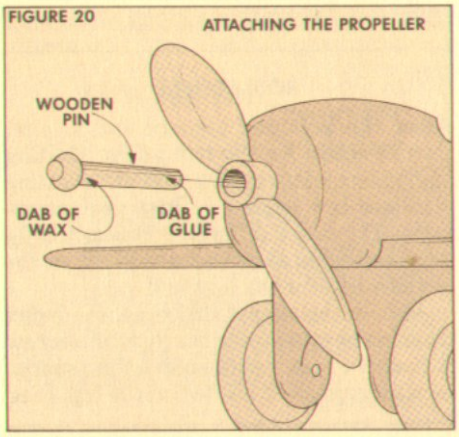

FIGURE 21

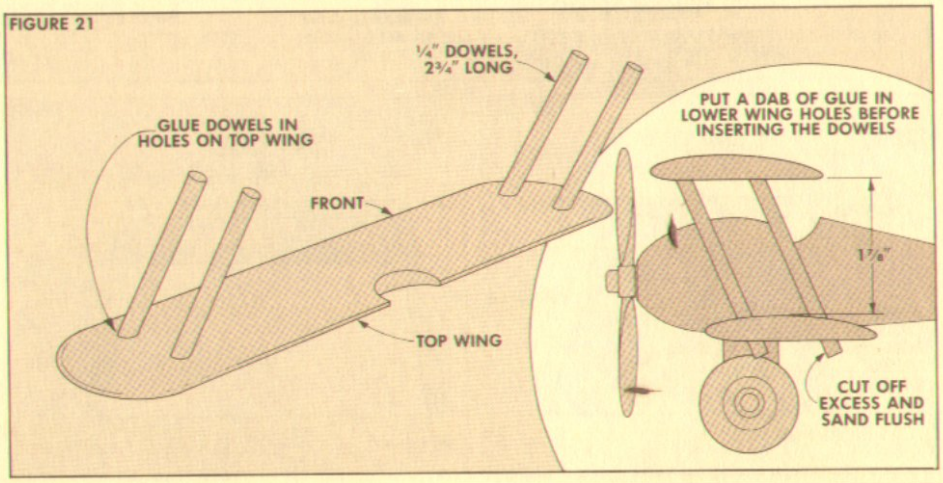

Child's Stool

GETTING A STEP UP WITH ANGLED BOX JOINTS

Joining two pieces of wood at any angle other than 90° can be a real problem. Not only do you have to get the angle right, but you also have to produce a strong joint. The stool shown here is a good example of one way to solve these problems and produce an attractive joint.

The legs are joined to the top at a 10° angle, using angled box joints. These joints produce a very strong joint that also happens to be easy to cut at any angle. All that's needed is a variation on the same jig that used to cut a 90° box joint . . . and the right procedure.

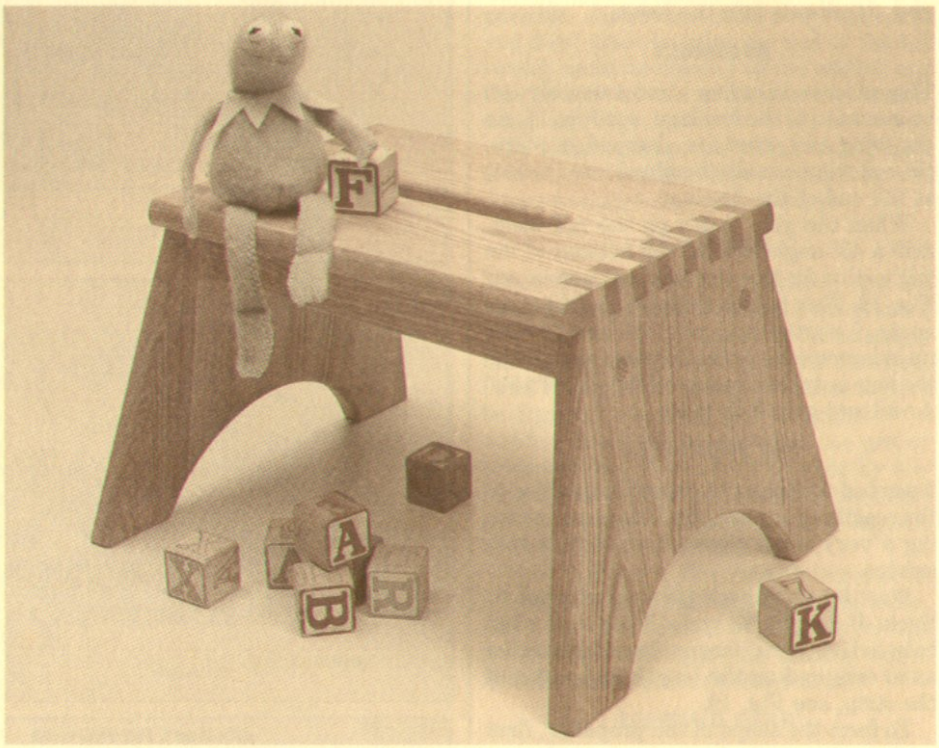

CUTTING THE STOCK

To build the stool, start by gluing up enough 4/4 stock to form two panels for the legs 13" wide by 9½" long, and one panel for the top 9½" wide by 12½" long.

CUT LEGS TO SIZE. After the panels are planed and sanded smooth, trim the two leg panels to a working width of 12½". (This is still ½" wider than the final dimensions, but it allows enough room to compensate for any error in the spacing of the box joints.)

Next, cut the legs to final length by cutting a 10° bevel on both ends. Cut these bevels so they're parallel to each other and produce a length of 9" from long point to short point, see Fig. 2.

CUT TOP TO SIZE. After the legs are cut to size, the top is ripped to a working width of 9". (Again, this is ½" wider than the final width to allow room for spacing the angled box joints.)

As on the legs, a 10° bevel is cut on both ends of the top. However, this time the bevel is cut in opposite directions on each end to produce a 12" overall length from short point to short point, see Fig. 3.

BOX JOINTS

After the legs and top are cut to size, they're ready for the box joints. Cutting angled box joints is very similar to cutting standard box joints . . . with two exceptions. The major difference is that the jig must be angled at 10° to cut the joint on the beveled ends of the legs and top.

Also, in the case of this stool, the index pin must be attached to the jig with a screw so it can be removed to produce the special joint arrangement needed on the top. (See page 15 for more on making this jig.) When the jig is ready, set it up to cut ½"-wide slots, 1/32" deeper than the thickness of the stock, see Box Joint Detail in Fig. 1.

JOINT ON LEGS. When cutting the joints on the legs, place the leg panel in the jig and cut slots across the entire 12½" width of the panel, see Fig. 2.

JOINT ON TOP. Then a special procedure is required to cut the slots on the top. The problem is that the first slot is positioned 1" from the edge. To make this cut, temporarily remove the indexing pin so the

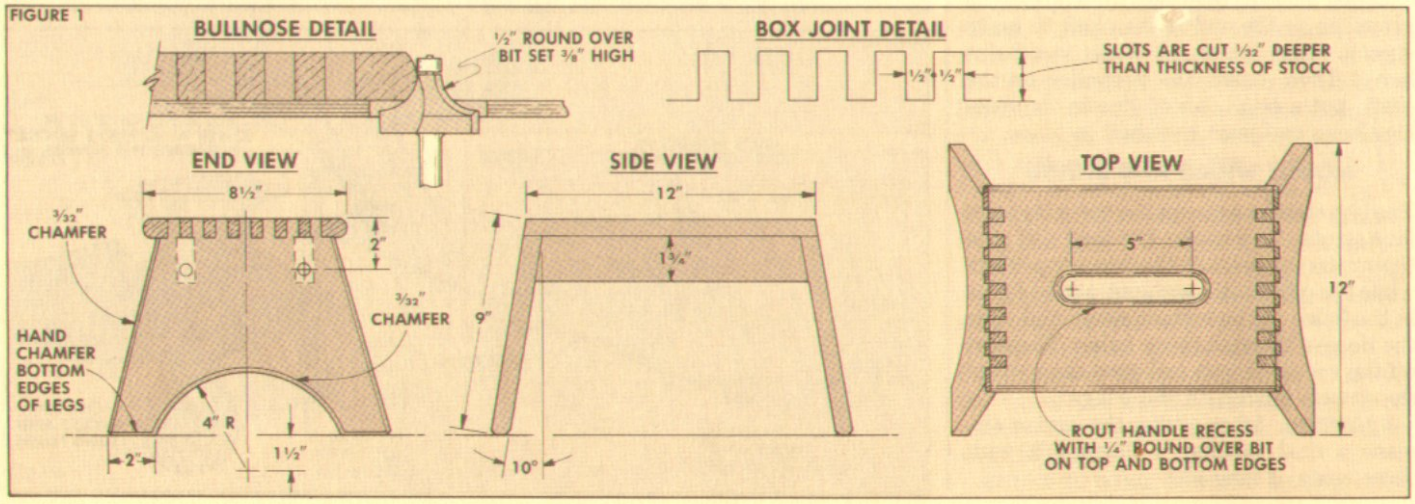

panel can be positioned to cut a slot 1" from the edge, see Step 1 in Fig. 4. Then replace the pin, and cut six more slots in the normal manner, see Step 2 in Fig. 4.

TRIM TO WIDTH. In order to have the box joints line up on both ends of the top, it has to be trimmed to final width *before* the slots are cut on the other end. Trim the waste off the edge so the last slot is 1" from the edge, see Step 3 in Fig. 4.

Then complete the joint by following the same procedure as above: remove the indexing pin, cut the first slot 1" from the edge, replace the pin, and cut the remaining six slots, see Step 4 in Fig. 4.

CUT HANDLE. Once the box joints are cut, drill two 1" holes in the top for the handle, see Fig. 3. Remove the waste between the holes and rout the edges clean. (See page 22 for a tip on doing this.)

ROUND EDGES. To finish the top, round over the edges of the handle recess with a ¼" round-over bit, see Fig. 1. Then round over the outside edges of the top using a ½" round-over bit set ⅜" high, see Bullnose Detail in Fig. 1.

TAPER THE LEGS. Next, taper the legs as shown in Fig. 2. Draw a line from the bottom outside corner of the third slot to a point 6" from the center line of the leg. Then cut this taper on a bandsaw and clean up the edge with a hand plane.

RADIUS. To complete the legs, draw a 4" radius centered 1½" below the bottom edge of both legs, see Fig. 1. Cut this radius on a bandsaw, and sand it smooth with a drum sander.

APRONS. Now, the two aprons can be added. First, cut two pieces 1¾" wide and to a rough length of 13". Then miter both ends at 10° so the length from short point to short point is exactly the same length as the distance between the box joint slots on the stool's top, see Fig. 5.

CHAMFER EDGES. Before assembly, use a router to chamfer the bottom edges of the apron, as well as the tapered edges and the radius on the legs. Note: The bottom edge of the "feet" are also chamfered but this has to be done with a chisel because of the angle on the bottom edge of the legs.

ATTACH APRONS. To attach the aprons, drill counterbores at a 20° angle to the face of the leg, centered over the first full slot, see Fig. 6. (See page 22 for the jig used to drill angled holes.)

ASSEMBLY. After the legs are counterbored, glue and screw the aprons to the top so they're centered over the first pin, see Fig. 5. Then dry assemble the legs and top, and complete the pilot holes by drilling into the ends of the aprons.

Finally, assemble the stool by gluing the box joints together and screwing the legs to the aprons. Then plug the counterbore holes on the legs and sand the joints smooth using a belt sander. I finished the stool with three coats of tung oil.

FIGURE 2

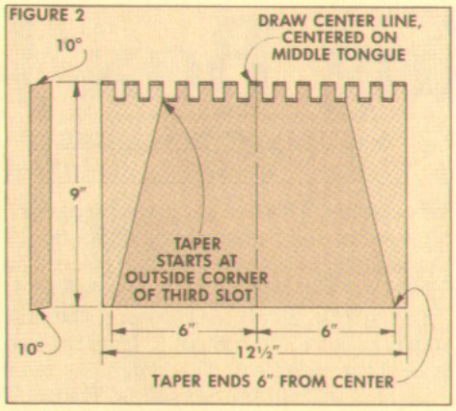

FIGURE 3

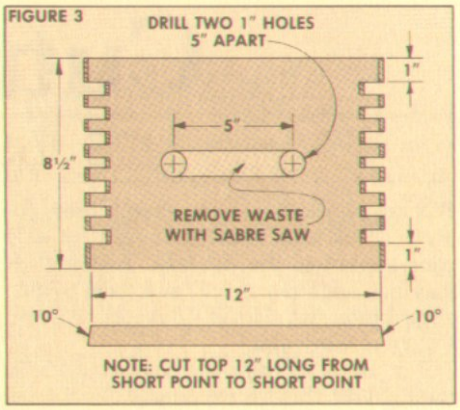

FIGURE 4

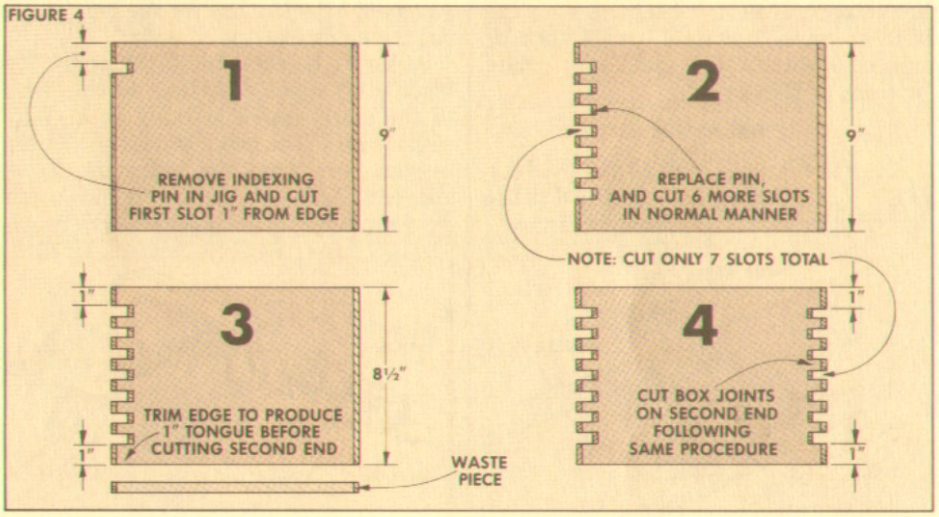

FIGURE 5

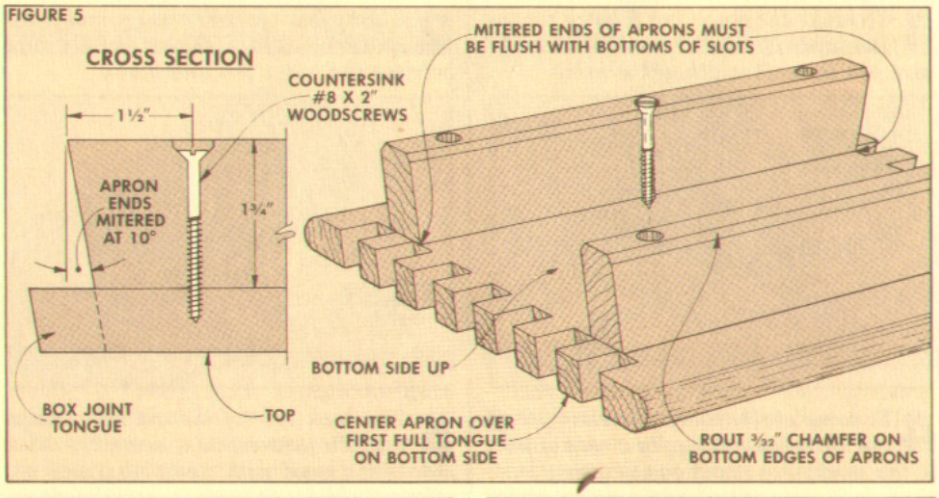

FIGURE 6

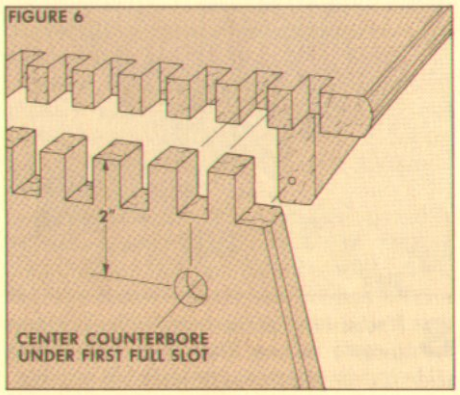

FIGURE 7

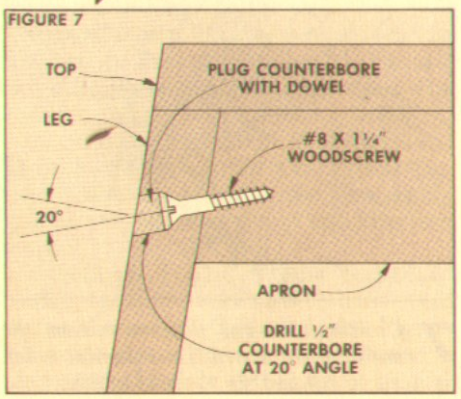

Cutting Box Joints

IT'S JUST ONE FINGER AFTER ANOTHER

Box joints don't get the credit they deserve. This joint is often thought of as a poor second to the dovetail. Although it may not have the fancy (and hard to cut) angled pins and slots of a dovetail, it's still a very strong joint.

Box joints do have one characteristic in their favor: they're extremely flexible as far as size (or scale) is concerned. They can easily be cut to "look right" on 4/4 stock, or reduced down to a scale that's appropriate for stock as thin as ¼".

THE FENCE

In order to cut a box joint all you need is a simple jig (or fence) that's attached to the miter gauge. This fence is just a piece of ¾" plywood or solid wood that's high enough to comfortably support the workpiece. The fence I use is 4" high by 24" long, see Fig. 1.

CUT NOTCH. To make this fence, the first step is to cut a notch about 6" from the end to hold the index key. This notch has to be exactly as wide as the box joints. That is, if you want ¼"-wide pins for the box joints, cut the notch exactly ¼" wide.

As for the height of the notch, adjust the blade so it's *slightly less* than the thickness of the stock you're working with. Why slightly less? The notch should be shorter because you want the index pin to be shorter. And you want the index pin shorter so the box joint slot fits over it with a little room to spare when the joints are cut, refer to Fig. 7.

INDEX PIN. Next, cut the index pin to fit precisely in the notch. (Cut a piece longer than needed so a section can be used later as a spacer.) Then cut off a 2"-long piece and mount it in the notch, see Fig. 1.

In most cases this pin can be glued into the notch. However, for one project shown in this issue (the child's stool), the pin had to be removable, so I mounted it with a small screw.

ALIGN JIG. Now the fence can be mounted to the miter gauge and aligned with the dado blade. To align it, use the

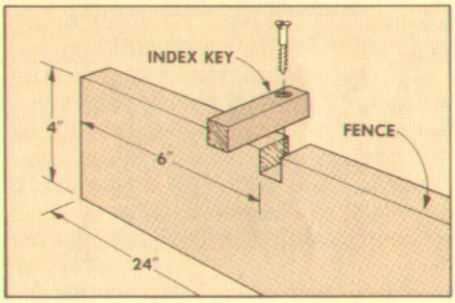

1 *To make the fence, cut a notch for the index pin about 6" from the end. Make sure pin is exact width of the notch.*

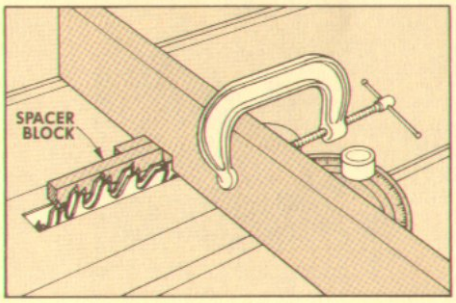

2 *Clamp fence to miter gauge and use a spacer block to get the correct distance between the index pin and blade.*

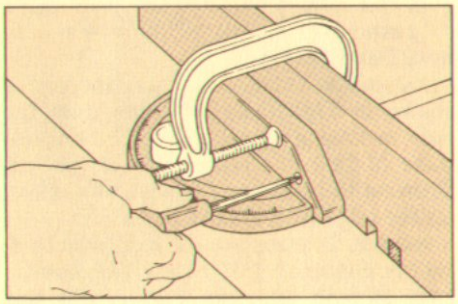

3 *Drill pilot holes in the back of the fence and screw it to the miter gauge. Make sure index pin is aligned correctly.*

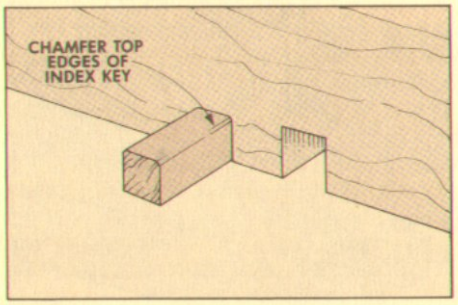

4 *To complete the index pin, chamfer off the top edges and apply a coat of wax so the workpiece slides easily over pin.*

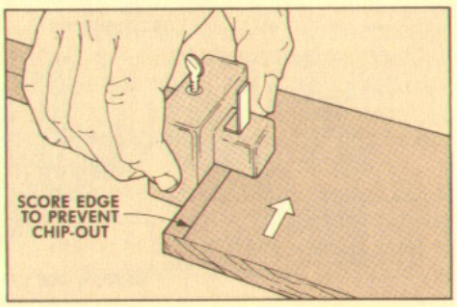

5 *The back side of the cut often chips out. To prevent this, score the back side of the wood with a cutting gauge.*

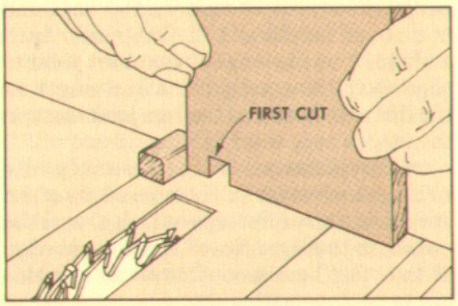

6 *To cut the joint, be sure board is vertical and tight against the index pin. Then guide it through the blade.*

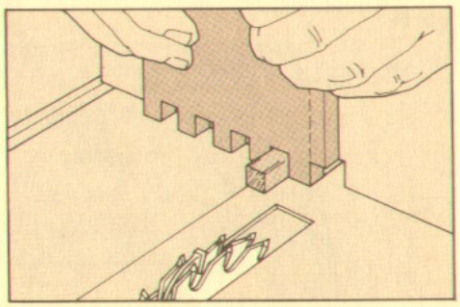

7 *Continue to cut notches across the width of the board. Last partial notch is used to rip boards to final width.*

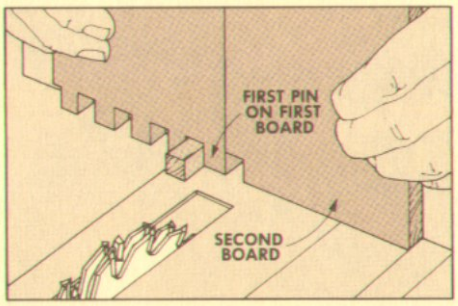

8 *Use pin in first board to align notch in second board. Cut first notch and slide it over pin to cut remaining notches.*

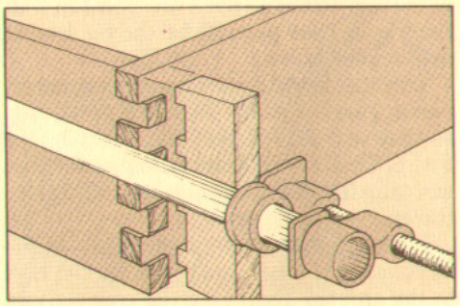

9 *Joints should fit with a good friction fit. To aid in clamping, cut a notched block to put pressure directly on each pin.*

left-over section of the index pin as a spacer, see Fig. 2. Adjust the fence so this spacer fits precisely between the index pin and the dado blade. Then clamp the fence to the miter gauge.

MOUNT FENCE. With the fence clamped in place, mark the location of the mounting holes in the miter gauge, and drill pilot holes in the back of the fence. Then screw the fence to the miter gauge, see Fig. 3. As the screws are tightened, check the alignment again to make sure the spacer block fits snugly between the index pin and the blade.

Finally, use a chisel to chamfer the top edges of the index pin and wax the sides so the workpiece will slide easily over the pin, see Fig. 4.

SPECIAL TIPS

Once the jig is set up, cutting the joint is really pretty easy. However, there are a few little tricks that improve the fit and finish of the joint.

HEIGHT OF BLADE. When setting the height of the blade to cut the joint, raise the blade so it's just slightly higher than the thickness of the workpiece.

What this does is make the pins (fingers) of the box joint slightly longer than needed so they stick out from the surface of the mating board, refer to Fig. 9. (I usually cut the workpiece 1/16" longer than needed and set the height of the blade 1/32" higher than the thickness to cut the pins on each end.)

Why would you want to do that? Doesn't it just create more work to sand the ends of the pins flush with the side of the box?

Yes, but sometimes when cutting the joints, the cuts are off just enough so the pins are too short. Then the whole side of the box has to be sanded down so it's flush with pins. I think it's easier to cut slightly longer pins and sand them down.

SCORE WORKPIECE. Before cutting the joint, it's also helpful to score the back side of the workpiece (the side that will be against the fence) with a cutting gauge, see Fig. 5. This score line will prevent chip out on the back side of the cut.

Shop Note: A cutting gauge is similar to a marking gauge, but it has a knife edge instead of a round point. If you'd like to make your own cutting gauge, see the article in *Woodsmith* No. 19.

CUT WORKPIECE TO WIDTH. One last tip. It's best to cut the workpiece a little wider than what's needed for the finished width. This allows some flexibility for setting up the joint. It's best to cut the boards to rough width, 1/4" to 1/2" wider than needed. Then trim the boards to the final width according to the final layout of the joints.

CUTTING THE JOINT

At last, everything is ready to cut the joints. Hold the workpiece so it's tight against the index pin and flat on the table, see Fig. 6. Then guide it through the blade to make the first notch.

From here it's just a matter of placing the first notch over the index pin and sliding the workpiece through the blade again. Repeat this until notches are cut across the width of the board.

Since the workpiece has been cut slightly wider than needed, the last cut should be a partial notch, see Fig. 7. Later, use the edge of this notch to trim the workpiece to final width.

SECOND BOARD. After the first board is cut, the second board is cut with mating joints. Since the first board starts with a pin, the second board has to start with a notch. To do this, use the first board as a guide. Flip it around so the first pin is between the key and the second board.

This positions the second board properly so the notch can be cut, see Fig. 8. After cutting this notch, slide it over the pin and continue to cut notches across the width of the board to complete the joint.

TRIM TO WIDTH. Now both boards can be trimmed to final width. Set up the saw using the partial notch on the first board as a guide, and rip both boards to width.

CLAMPING. Now test the fit of the joints. They should fit together with a good friction fit. Then to assemble the joint, apply glue to the inside edges of the pins and notches.

To pull the joint tight, use a notched block to apply pressure directly to each pin as the clamps are tightened, see Fig. 9. When the glue is dry, use a belt sander to sand down the ends of the pins.

Box Joints: *at an angle*

One of the more intriguing aspects of a box joint is that it can be cut at an angle. We used this application on the child's stool shown on page 12.

Cutting angled box joints is really not that difficult — all that's needed is an angled fence on the miter gauge in order to cut the bottoms of the notches at an angle (10° in the case of the stool).

To make this fence, angle the saw blade and raise it to make a partial cut (as deep as the miter gauge is high) on the edge of a 2x4, see Step 1 in Fig. 1. Next, rip the bottom edge of the 2x4 at the same angle, see Step 2. And finally, make a cut to trim out an angled notch to fit on the miter gauge, Step 3.

Attach this fence to the miter gauge and cut the slot for the index pin, then cut the pin, and finally mount the pin.

Now, before cutting the joints, miter the ends of the boards at the same angle as the joint. Also, rip the boards a little wider than needed to allow some flexibility in setting up the joint.

To cut the joints, start with a trial piece and cut the joints across one end of the board as usual, see Fig. 2. Before cutting the other end, this board has to be trimmed to final width, see Fig. 3. (It has to be trimmed now because the trimmed edge is the one that leads the cuts on the other end, see Fig. 4.)

However, in order to trim the board to width, you have to switch blades, which is kind of a hassle. Go ahead with this interruption, trimming the trial piece to width according to the final spacing of the joints. Then rip the "real" boards to width and cut the angled joints on both ends.

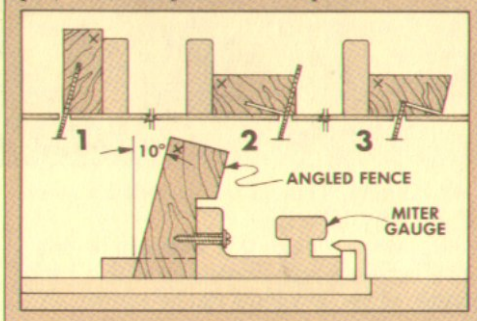

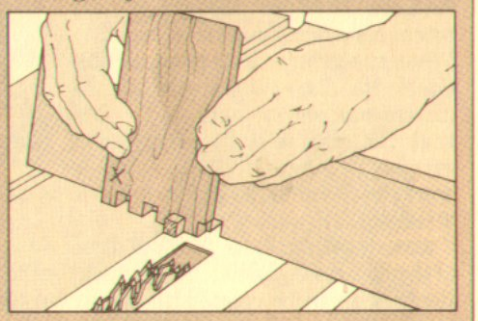

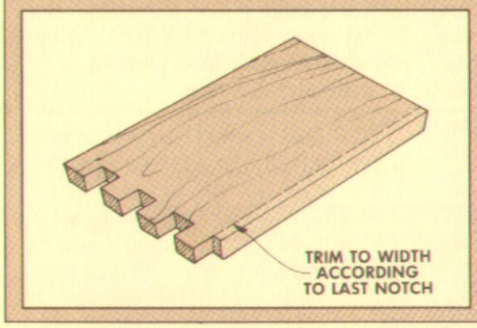

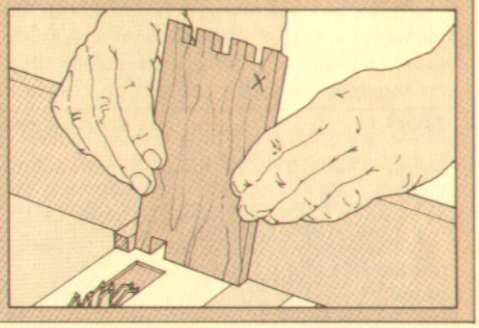

Coffee Grinder

AN OLD-FASHIONED BOX JOINT PROJECT

One of the nice things about building small boxes is the opportunity to use box joints. As we were designing the projects for this issue, I decided at least one of them should include a small box-joint drawer. After all, box joints produce one of the most attractive drawers around.

As it turned out, we had the works for a coffee grinder sitting around the shop for a couple of years. All the good intentions to build the box for it never seemed to materialize. But now we had the perfect opportunity and no more excuses.

DIMENSIONS. Before the box for the coffee grinder can be built, the first step is to purchase the grinder mechanism (see Sources on page 24). When the grinder is in hand, double check its dimensions against the dimensions shown here to be sure that the box will fit. The coffee grinder we had (from the Woodworkers' Store catalog) fits on a box that's 4 15/16" square.

RESAW STOCK. Once the final dimensions of the box are determined, the stock for the four sides can be cut to size. I decided to resaw the stock down to a 3/8" thickness for this box. I also discovered that it was much easier to resaw one long piece rather than try to resaw all the pieces for the box individually. This meant I needed a piece 6" wide by 48" long.

Resawing a piece this wide can be done on a bandsaw and cleaned up with a hand plane, or two 3" widths can be resawn on a table saw and edge-glued together. (See page 21 for more on resawing.) Either way, you want to end up with a piece 3/8" thick, 6" wide and 48" long.

THE BASIC BOX

When the resawn stock is ready, the back (A) and both sides (B) of the box are cut to rough size 5" long by 4 3/4" wide, see Fig. 1. Shop Note: These pieces are cut 1/16" longer than the finished length of 4 15/16" and 1/4" wider than their final width to allow for variations in the spacing of the joints.

Next, the front (C) of the box and the drawer front (D) are cut to size, each 5" long by 2 1/2" wide. To achieve a continuous grain pattern across the front of the grinder box, I cut both pieces from a double-wide piece, marking the top half as the box front (C), and the bottom half as the drawer front (D).

CUT JOINTS. After the pieces are cut, the box joint jig is set up to cut a 1/4"-wide slot, 1/32" deeper than the thickness of the stock (so the pins extend 1/32" beyond the joint).

BACK. To cut the joints, I started with the back (A). Butt the top edge of the back against the indexing pin, and cut the first slot. Then re-position this slot over the indexing pin and cut another slot. Continue this procedure until a total of 9 slots are cut on the both ends of the back piece, see Fig. 1.

FIGURE 1 NOTE: ALL PIECES ARE 3/8" THICK

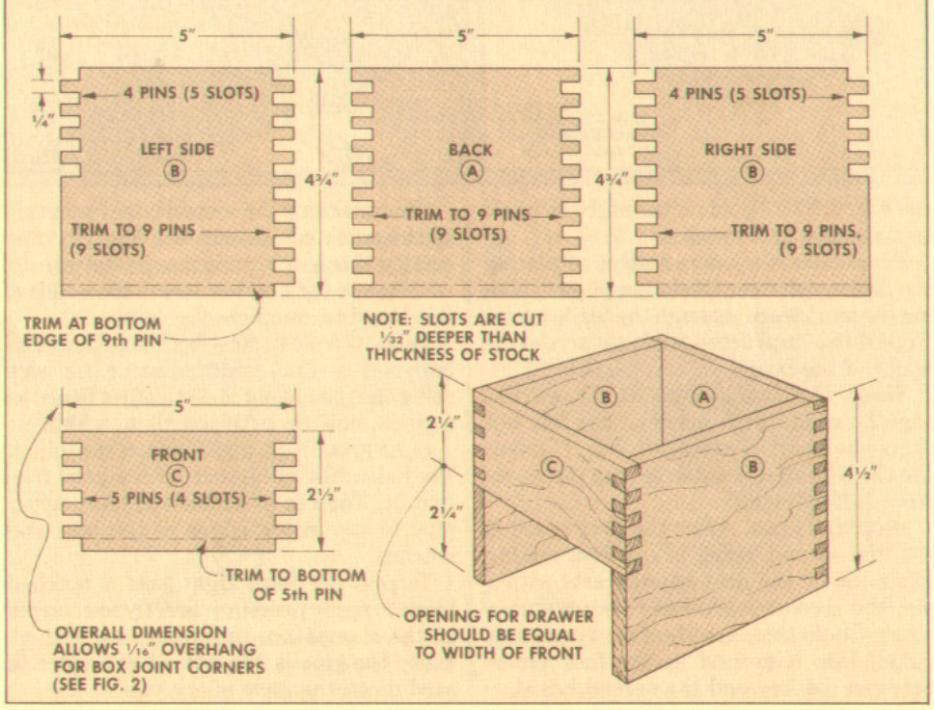

FIGURE 2

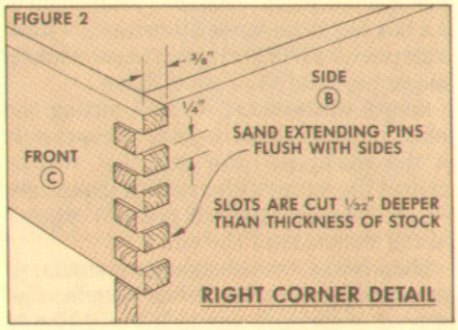

FIGURE 3 BOTTOM VIEW OF BASE

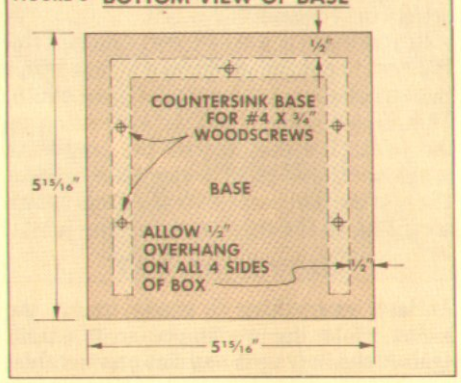

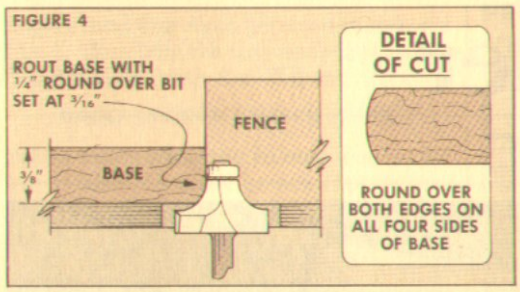

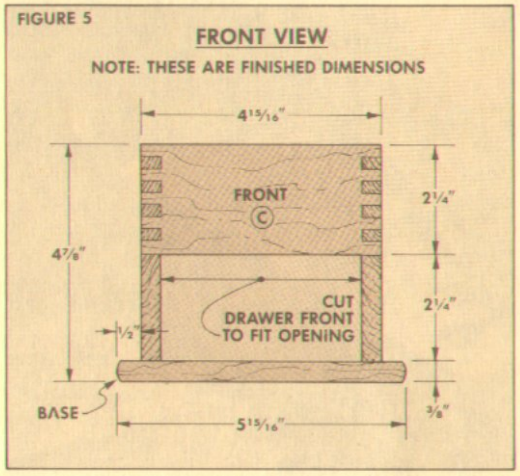

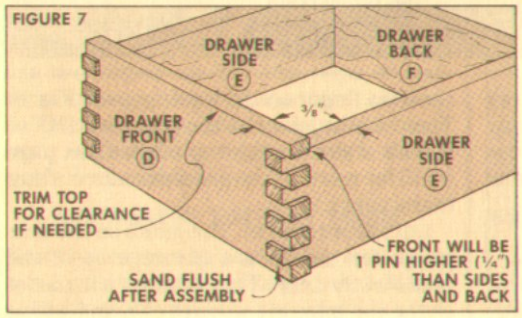

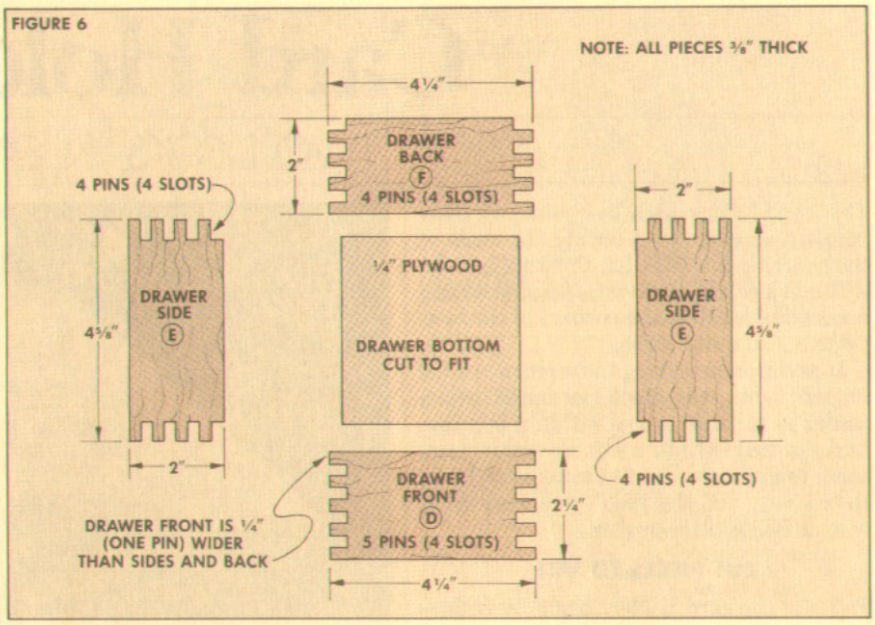

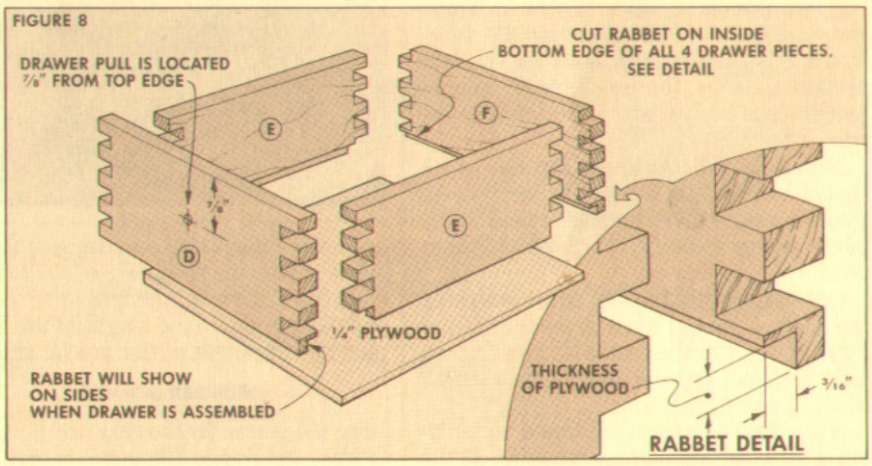

FRONT. The joints on the front are cut using the same procedure, except only 5 slots are cut.

SIDES. After the back and front are completed, the joints on the sides (B) can be cut. In order to mate with the back piece (A), the joints on the side pieces start with a slot on the top edge. (See page 14 for more on this procedure.)

Follow the same procedure for the joints on the front edge, except only 5 slots are cut on this edge to match the fingers on the front, see Fig. 1.

TRIM TO SIZE. Once the joints are cut, all four pieces are trimmed to final width. The *bottom* edge of the sides are trimmed flush with the 9th finger and the back is trimmed flush with the 9th slot, see Fig. 1. Then the bottom edge of the front piece is trimmed flush with the 5th pin, see Fig. 1.

ASSEMBLY. After all of the pieces are trimmed to size, glue the box together and sand the pins flush with the sides of the box using a belt sander, see Fig. 2.

THE BASE. Now the base can be added. To make the base, cut a piece of 3/8"-thick stock 1" wider and longer than the outside dimensions of the box, see Fig. 3. Then round the edges of the base using a 1/4" round-over bit set 3/16" high, see Fig. 4. Attach the base to the box with #4 x 3/4" Fh screws. (Note: Don't use glue. The base must be able to move slightly with seasonal changes in humidity.)

THE DRAWER

At this point, the basic box for the coffee mill is complete. The only thing left to build is the drawer to fit the opening in the box.

CUT TO SIZE. The first step in building the drawer is to cut the pieces to width. The drawer front (D) is cut to width to fit the height of the opening in the assembled box. Then the drawer sides (E) and back (F) are cut 1/4" (or the equivalent of one pin) narrower than the width of the front, refer to Fig. 7.

Next, cut these pieces to final length. The drawer front and back are cut 1/16" longer than the width of the box opening (see Fig. 5), and the sides 1/16" longer than the depth of the box. Shop Note: This extra 1/16" in length allows the pins to extend 1/32" beyond the box joints.

JOINERY. To join the drawer, I cut the joints on the front and sides so there's a pin on the top edge. The back is cut the same way except after it's cut, it's flipped so the pin is on the bottom edge, see Fig. 6.

RABBET FOR BOTTOM. After the joints are cut, a 3/16"-wide rabbet is cut on the bottom inside edge of all four pieces for a 1/4" plywood bottom, see Detail in Fig. 8. Note: When the drawer is assembled, this rabbet produces a small gap on the sides of the finger joint. This gap can be filled with a mixture of sawdust and glue.

ASSEMBLY. Before the drawer is assembled, cut the plywood bottom to fit, and drill a hole in the drawer front for the pull, see Fig. 8. Then glue the drawer together with the bottom in place. When the glue is dry, sand the corner joints flush.

MOUNT GRINDER MECHANISM. After the drawer is complete, position the coffee grinder mechanism on top of the box and drill pilot holes for the mounting screws.

FINISH. I finished the coffee grinder with three coats of Behlen's salad bowl finish. This finish is one of the safest finishes to use around food.

Card Holder

TWO DECKS IN ONE

This card holder uses box joints to their best advantage. By reducing the scale of the joint so the pins (or fingers) are the width of a single blade cut, the joint adds a decorative touch to the corners of the box, yet it's still quite strong.

In addition to making these small box (or finger) joints, the challenge on this card holder is to build a box within a box (actually a tray within a lid) to within very small tolerances. The fit has to be right on the money, and the result is a very nice, very delicate little project.

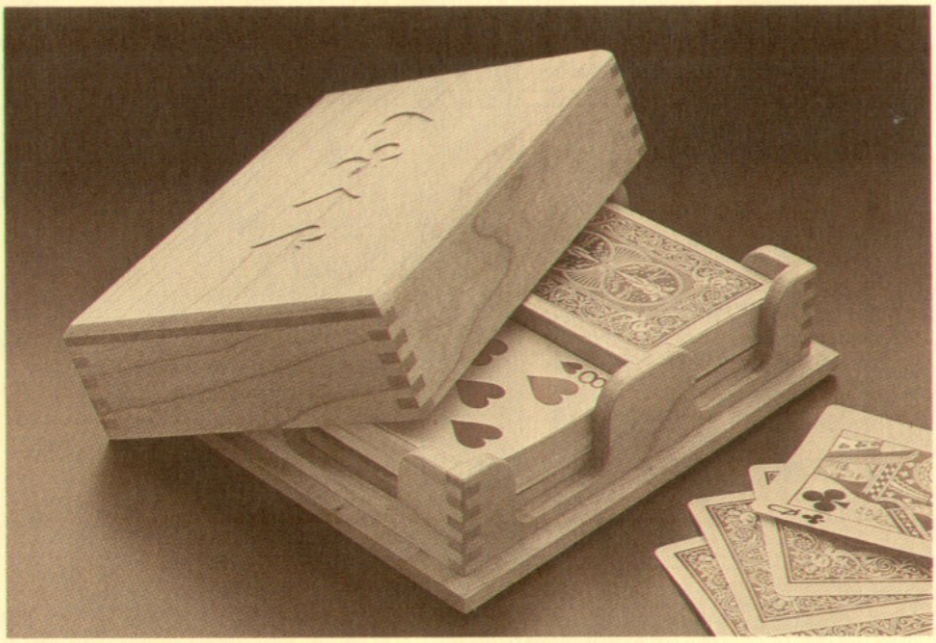

CUT PIECES TO SIZE

To build the card holder, begin by resawing two pieces of stock ¼" thick. These strips should be 1½" wide by 35" long, which will yield enough stock for the four sides of the tray, the tray divider, and the four sides of the lid, with some left over for trial cuts.

Note: The ¼" thickness for this stock should be pretty much on the money. All the dimensions given here are based on the parts being exactly ¼" thick, without much room to spare.

CUT PIECES TO LENGTH. After resawing the stock, I started work on the four pieces for the tray. Cut the two tray sides (A) to a length of 5⅞", and the ends (B) to a length of 4 1/16", see Fig. 1.

Note: These lengths are based on building a tray for standard-size cards. If the tray is built for bridge cards, the lengths have to be changed because these cards are narrower. In this case, cut the tray sides 5 7/16" long and the ends 3⅝" long.

CUT LID PARTS TO LENGTH. After the pieces for the tray are cut, they're used to determine the lengths of the four pieces for the lid (F and G). That is, the length of the lid side (F) is equal to the length of the tray side (A) plus the *thickness* of the *two* tray ends (B). Likewise, the length of the tray end (G) is equal to the length of the lid end plus the thickness of the *two* lid sides.

FINGER JOINTS

Once the pieces for the tray and lid are cut to size, the finger joints can be cut. Normally, when cutting finger joints, I would set up the jig and adjust the depth of cut so it's a little deeper than the thickness of the stock (¼" in this case). But on this card holder, the pieces are so small, I decided to cut the joints for an exact fit.

JOINTS FOR TRAY. When the jig is set up, start the joints on the tray sides (A) so there's a finger on the top edge, see Fig. 2. Then cut the joints on the tray ends (B), so there's a slot on the top edge. (See page 14-15 for more on the procedure for cutting these joints.)

LID FRAME JOINTS. The joints on the four pieces for the lid are the reverse of the joints on the tray. That is, start with a slot on the top edge of the sides (F), and with a finger on the top edge of the ends (G), see Fig. 3.

CUT TO WIDTH. Now these pieces can be trimmed to final width. But rather than measuring this cut, these pieces are cut to final width according to the spacing of the fingers and slots. That is, trim the bottom edge off the tray sides (A) to leave five full

FIGURE 1

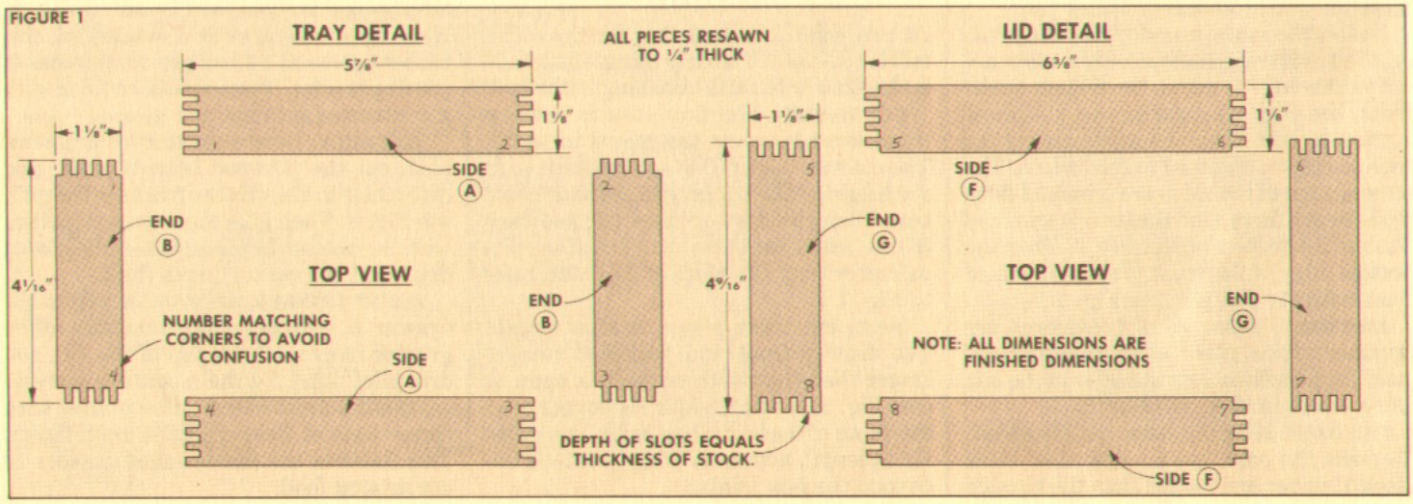

fingers (and four slots between them), see Fig. 2. Then trim the tray ends (B) to leave five full slots (with four fingers).

DADO DIVIDER AND CUTOUTS

Before assembling the frames, dadoes for the divider (C) must be cut exactly centered on the inside faces of the tray sides. To make these cuts, attach a fence to the miter gauge to give full support to these small pieces, see Fig. 4.

Then set the rip fence as a stop so the saw blade cuts a dado just slightly off the center line of the tray side (A). Adjust the depth of cut to ⅛" and make a pass. Without changing the rip fence setting, turn the piece end for end and make another pass, see Fig. 5.

This procedure automatically centers the dado on the length of the piece. If the dado isn't quite wide enough, tap the rip fence away from the blade and make two more passes until the dado fits the thickness of the divider.

THE CUTOUTS. After the dadoes are cut, the curved cutouts can be marked on all four pieces of the tray, see Fig. 6. Locate the center points of the ½"-diameter holes on the side and ends as shown in Figure 6, and drill them with a Forstner bit.

CUT OUT. After the holes are drilled, lay out the radius on the top edge of each corner using a nickel as a pattern, see Fig. 6. Then cut the pieces to shape on a bandsaw, and sand the edges smooth with a small drum sander.

ASSEMBLING THE TRAY FRAME

Now the tray can be assembled. Just apply some glue with a small artist's brush, and push the joints tightly together by hand. (You won't need to clamp them.) Make sure the joints are square, and let this assembly dry.

PLATFORM. Then to complete the tray, a platform (D) is made to raise the deck of cards decks above the bottom of the cutout recesses, so even the last card is easy to pick up.

To make this platform, resaw a piece of stock ⅜" thick and cut it to fit tight inside the tray frame, see Fig. 8. Take note of where the actual gluing surfaces are and use the glue sparingly to join the platform inside the frame.

DIVIDER. To complete the tray, cut the divider (C) to width so the top edge is flush with the top edge of the tray, see Fig. 9.

ASSEMBLING THE LID FRAME

That completes the tray. Now the lid can be assembled to fit over the tray, see Fig. 10. First, dry assemble the sides and ends of the lid and test the fit.

It will probably be a smidgen too tight. That's okay, go ahead and glue up the lid and then sand down the sides of the tray until the lid fits easily over the tray.

FIGURE 2

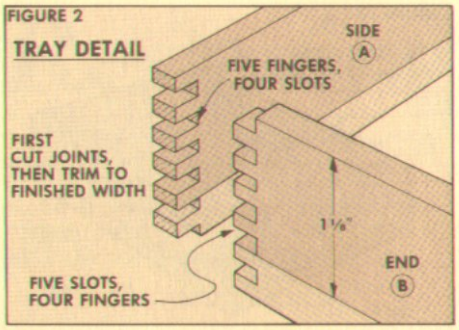

FIGURE 3

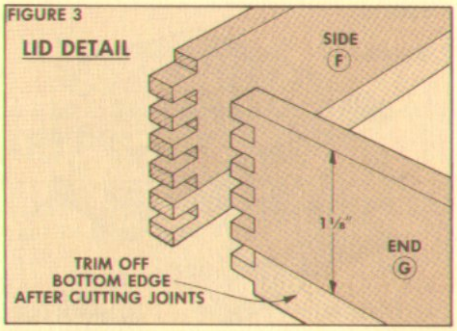

FIGURE 4

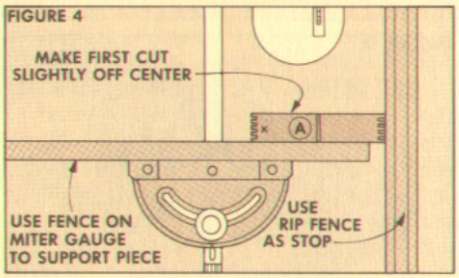

FIGURE 5

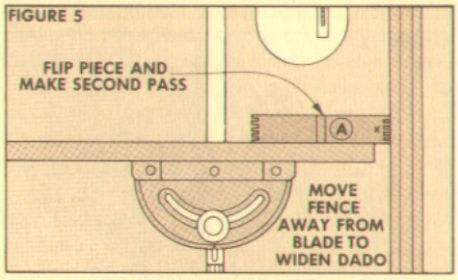

FIGURE 6

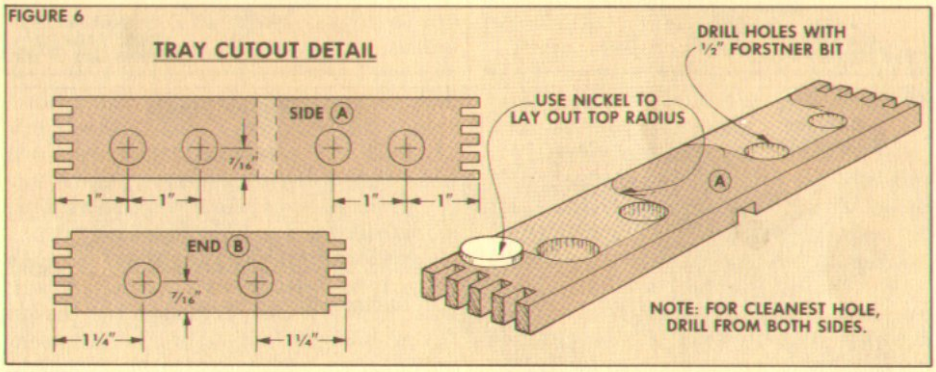

FIGURE 7

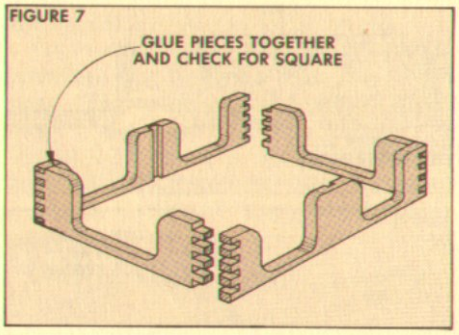

FIGURE 8

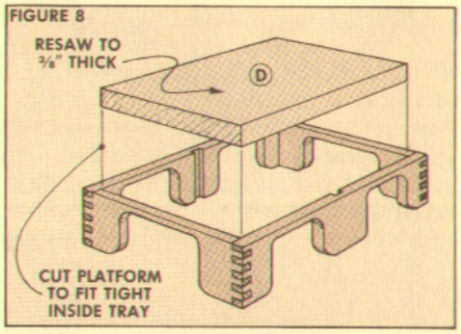

FIGURE 9

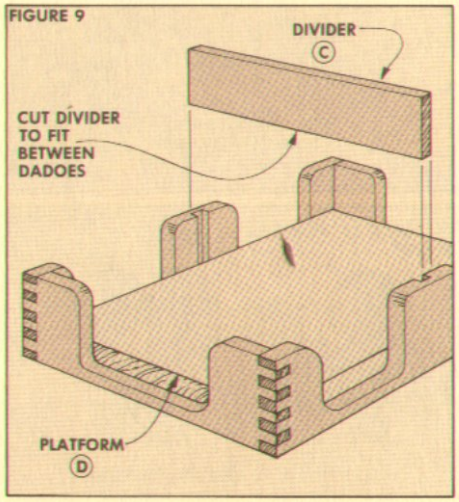

FIGURE 10

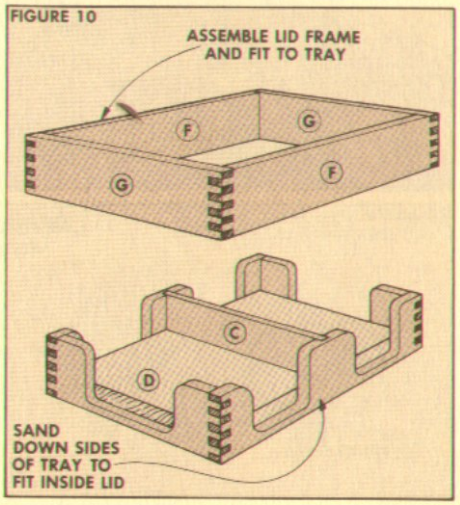

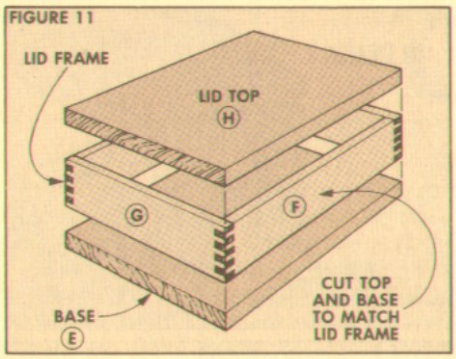

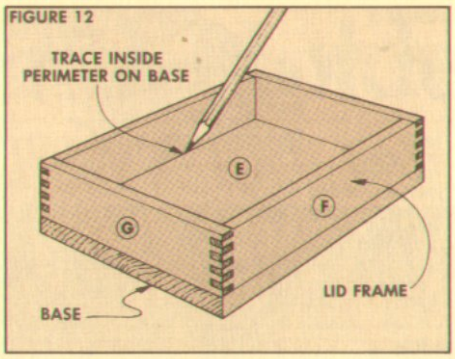

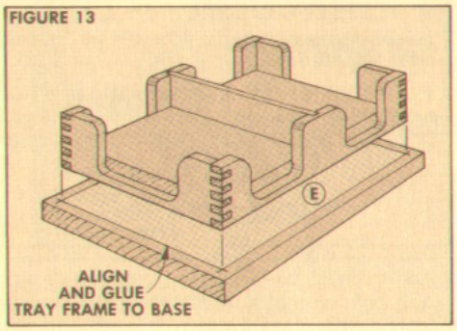

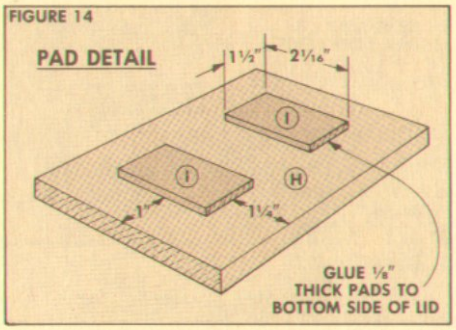

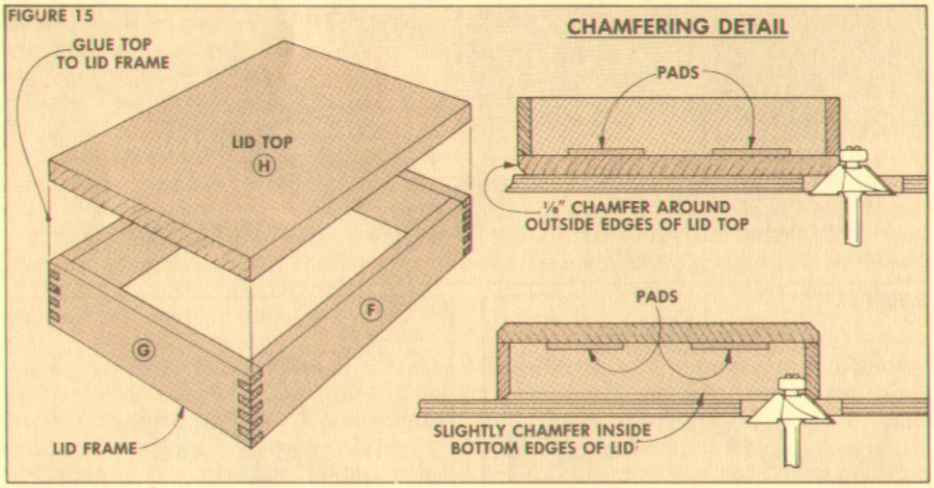

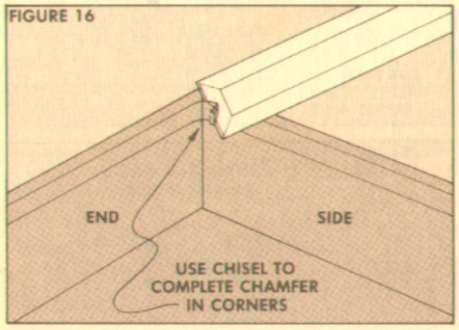

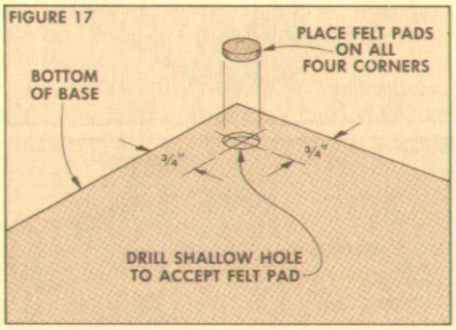

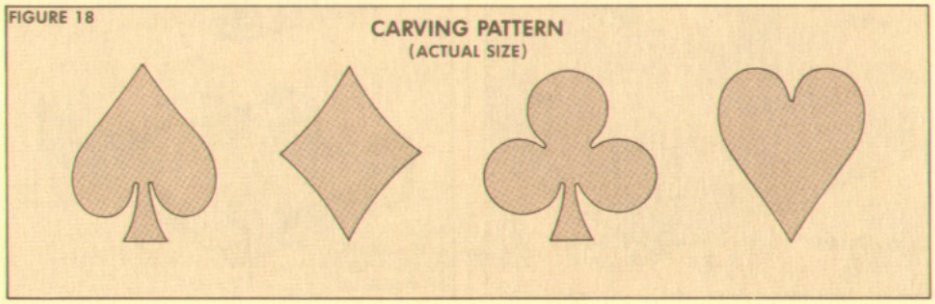

COMPLETING THE BASE

After the lid and tray are sanded to a good fit, the base (E) can be added to the bottom of the tray. Since this piece is exactly the same size as the top (H) for the lid frame, I cut both pieces at the same time.

CUT TO SIZE. First, resaw enough stock ¼" thick for both pieces. Then use the lid frame as a guide to cut both pieces to final size, see Fig. 11.

MOUNTING THE BASE. Next, mount the base to the tray so there's an even overhang on all four edges, refer to Fig. 13. To align the tray, use the lid frame as a guide. Place the lid frame over the base and mark the inside circumference, see Fig. 12.

ASSEMBLY. Now the tray can be glued to the base. This is an awkward clamping job at best. I found the easiest way to even out the pressure of the C-clamps was to make a "sandwich" by placing a board on the top edges of the tray.

THE LID

At this point the tray is complete. Now the lid frame can be completed by mounting the top (H). But before gluing it on, I thought I'd try my hand at a little carving by carving the symbols for the four suits on the lid top. Figure 18 is a full-size pattern of the carving I made. (Another choice would be to add a marquetry inlay to the lid, see *Woodsmith* No. 28.)

HOLD-DOWN PADS. After the top was carved, I cut two ⅛"-thick hold-down pads (I) and glued them to the underside of the top so they're centered over each tray, see Fig. 14. (As the decks are used, they tend to "puff up." These pads help keep the cards in the trays and prevent them from sliding over the center divider.)

GLUE TOP TO LID. Finally, the top can be glued to the lid frame. After it's dry, it may be necessary to do some additional sanding for a better fit. Place the lid over the tray and sand the outside perimeter of the box until the surfaces of the top, the lid frame, and the base are flush with each other.

ROUT CHAMFERS. After sanding, use the router table to rout a ⅛" chamfer all the way around the top edge of the lid, see Fig. 15. Also, to make the lid slide over the tray a little easier, rout a chamfer on the inside edge of the lid. Since the router bit won't quite fit into the corners, I had to clean them up with a chisel, see Fig. 16.

FINISHING STEPS

To complete the card holder, I mounted felt pads to the bottom of the tray. Locate the centerpoints of the holes for the pads ¾" from each edge and drill shallow holes in the base, see Fig. 17.

FINISH. Finally, sand all surfaces of the card holder smooth and apply the finish. I used three coats of Sutherland Welles Tung Oil.

Resawing

PRODUCING THIN STOCK ON A TABLE SAW

Resawing is nothing more than cutting thin pieces out of a thick piece of stock. (In effect, ripping on edge.) This is usually done on a band saw. However, most band saws leave a rather rough surface that requires a considerable amount of cleaning up with a hand plane before the stock can be used.

TABLE SAW METHOD. Another way to resaw is on a table saw. If the stock is less than 6″ wide (which is about twice the maximum depth of cut with a 10″ blade) it can be cut on a table saw.

In fact, if the stock is less than 2″ wide, it can be resawn in one pass and have a very clean, ready-to-use surface. If the stock is wider than 2″, it will probably have to be cut in a two-step process which involves making cuts from both edges.

FENCE. Before making any cuts, the first step is to mount a high fence on the saw to provide support for the piece being cut. I use a 6″ high fence that straddles the rip fence, see Fig. 1. This fence helps prevent the stock from teetering during the cut and makes for a steadier cut.

CHOOSING STOCK. Once the fence is mounted to the saw, the next step is to choose the right stock. Resawing is prone to many problems with warping. And the worst thing is to start with stock that's warped. (It's also dangerous.)

Choose stock that's as straight and free of cup and warp as possible. Even if the lumber is perfectly flat at the start, very often it will cup slightly after the initial cut. This will cause the blade to clip the piece at the ends on the final pass, see Fig. 6. So I always cut each piece about 6″ longer than needed so the ends can be cut off after the piece is resawn.

ROUGH CUTTING

After the stock is chosen, I use a two-step procedure to resaw it. First, resaw it to rough thickness, about 1/16″ thicker than the final thickness you want.

To make the first cuts, I use a 24-tooth rip blade. (Resawing is actually a ripping operation — cutting with the grain.) Raise the saw blade no more than 1½″ on the first cut, and position the fence to cut the stock 1/16″ thicker than the final thickness needed.

Shop Note: The actual height of the blade for the first pass should be varied according to the species of wood and the horsepower of the motor on your table saw. For the first pass, I generally don't raise the blade more than about 1½″ high. At this height, even a 1 hp motor should cut through maple without bogging down.

CUT THE STOCK. Use a large push stick (like the one shown in Fig. 2) to feed the board through the blade, keeping the board tight against the fence. Then flip the piece end for end (so the same face is still against the fence) and make a second cut on the opposite edge, see step 2 in Fig. 3.

On stock that's 3″ wide or less, try to complete the resawing with the second pass. (The fewer cuts the better.) If the stock is too wide for two cuts, raise the blade in ½″ increments and run both edges through the saw a second time, see Step 3 in Fig. 3. Continue to raise the blade in ½″ increments and make double passes until the cut is complete.

FINAL CUTTING

After the stock is rough cut to within 1/16″ of final thickness, I switch back to a 40- or 50-tooth combination blade to improve the quality of the finish on the resawn surface.

CUPPING. Very often the stock will develop a minor cup after the first cuts. If this happens use a feather board to hold the board flat against the fence.

Set up the feather board just ahead of the blade, see Fig. 4. If the stock is cupped toward the fence, raise the position of the featherboard to the center of the board, see Fig. 5.

If the stock is cupped away from the fence, keep the featherboard flush with the table top and push the top edge against the fence as the cut is made.

Since there's only 1/16″ of stock to remove, adjust the fence to cut the final thickness. Then raise the blade ⅛″ higher than half the width of the stock so the cuts can be completed in just two passes, see Steps 4 and 5 in Fig. 3.

MAKE FINAL CUTS. As the final cuts are made, push the board through the blade without hesitating. This will help prevent burning. Then flip the stock end for end to complete the trimming cut.

If the stock is cupped at all, it will probably spring back as soon as it clears the featherboard. The result is that the blade will gouge the last couple of inches at both ends of the board, see Fig. 6. Simply cut off both ends to remove the areas affected.

FIGURE 1

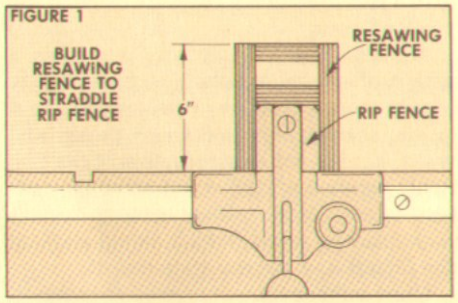

FIGURE 2

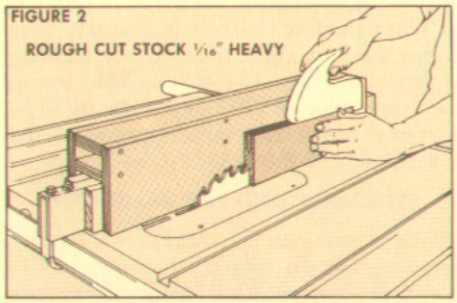

FIGURE 3

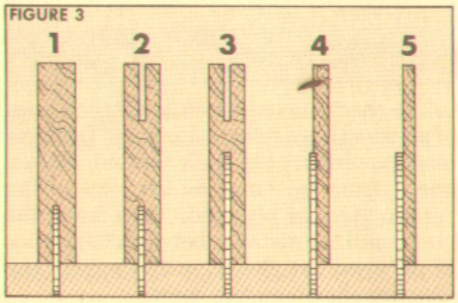

FIGURE 4

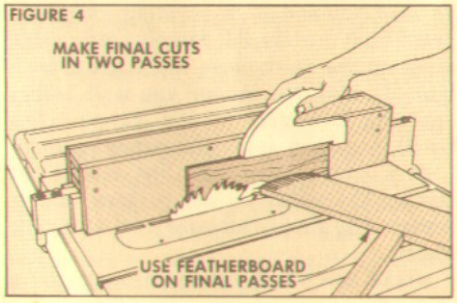

FIGURE 5

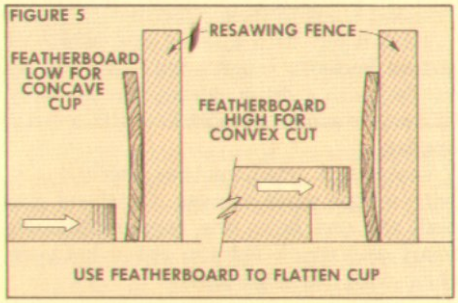

FIGURE 6

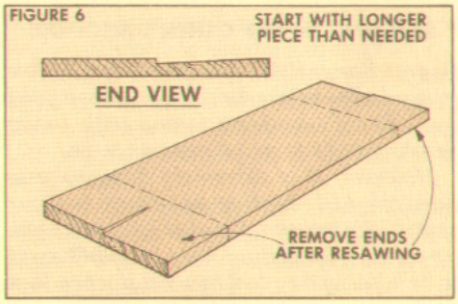

Talking Shop

AN OPEN FORUM FOR COMMENTS AND QUESTIONS

DRILLING AT AN ANGLE

Drilling holes at a specific angle was always a headache . . . until I built this simple drilling jig. This jig produces accurate angles every time, and you don't have to mess around trying to tilt the table of the drill press (which is almost impossible to do accurately).

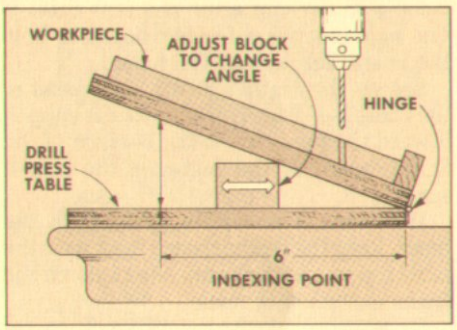

The drilling jig consists of two pieces of plywood that are hinged on one edge. Also a fence is attached to hold the workpiece in place, see drawing.

To adjust the angle of the jig, use a block of wood to lift the top piece of plywood to produce the angle needed.

If you got an "A" in trigonometry, it's a snap to determine how high to raise the top piece to produce a specific angle. But for the rest of us, there's a simple chart that makes determining the angle even easier.

ANGLE OF JIG	HEIGHT AT INDEXING POINT
5°	9/16"
10°	1 1/16"
15°	1 5/8"
20°	2 1/8"
25°	2 11/16"

The chart shows how far apart the pieces of plywood need to be at a point 6" from the hinge to produce the angle wanted. Mark a line 6" from the hinge on the edge of the bottom piece of plywood. Then move the block until the distance between the pieces of plywood (at the 6" mark) equals the distance shown on the chart.

SANDING IN THE OTHER DIRECTION

George Kemmitz's tip on sanding a hollow ground edge in Woodsmith *No. 33 is a good one. There's nothing wrong with using sanding belts to grind various tools.*

However, it is extremely dangerous to have the belt rotating as shown in your sketch. Sometimes, the glue joint will open up on inferior belts. I sure wouldn't want to be holding any tool against it when that happens with the belt rotation as shown.

The proper way to use a sanding belt sharpening system is to always have the rotation of the belt away from the edge of the tool.

Charles Riordan
Dansville, New York

DRUM SANDING PLATE

When I was building the toy truck shown on page 4, I cut the fenders to shape on a band saw and smoothed them with a drum sander on the drill press.

The only problem with using a drum sander is that it has to be lowered below the surface of the table in order to sand the entire width of the truck fender. But at the same time, the table also has to provide support for the fender right next to the sanding drum.

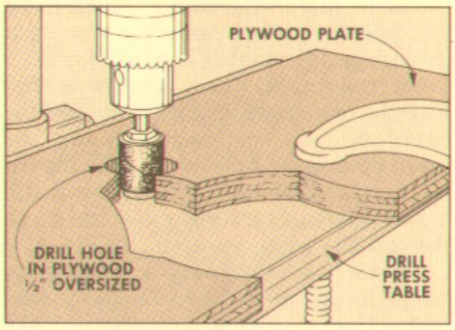

To solve this problem, I drill a hole near the edge of a piece of plywood that's ½" larger than the sanding drum. Then the drum sander is lowered into the hole so it's below the surface of the table.

When sanding thin pieces, the plate provides support right next to the sanding drum (which is necessary on thin pieces like the truck fender), yet allows it to be lowered below the table surface so the entire edge of the piece can be sanded.

STRAIGHTENING THE HANDHOLD

While working on the child's stool for this issue we had a problem. How do you make a straight and smooth internal cut between two end holes to form a handhold?

I cut it out with a sabre saw, which of course leaves a rough edge. This can be sanded with a drum sander, but it's very difficult to sand a straight line with a drum sander.

Instead, I tried another method . . . with a little more success. Go ahead and drill the end holes the correct distance apart and rough out the space between them with the sabre saw.

Make the sabre saw cuts approximately 1/16" inside the lines that connect the holes. Then take this rough-cut handhold to the router table. Mount a ¼" straight bit high enough so that it cuts the full thickness of the workpiece.

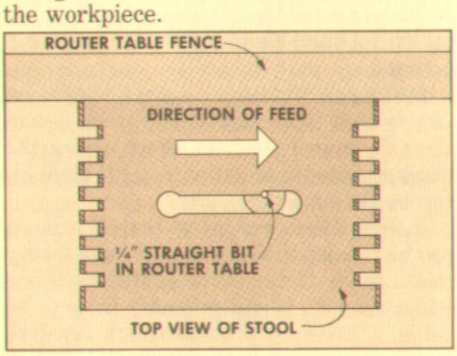

Then position the fence so the bit trims a slight amount off the edge closest to the fence, see drawing. Start by making a plunge cut in the right-hand hole, and rout along the rough edge, being careful not to rout too far into the left hole.

If, after the first pass, you still haven't reached the tangent of the holes, move the fence toward the bit slightly and trim off a little more. Continue to sneak up on the cut, until you have a smooth, straight line between the end holes.

A STICKY SUBJECT

As we were building the projects for this issue, there were several times we needed to temporarily adhere one thing to another. For example, in order to cut out the shape of the fuselage for the toy airplane (page 8), we had to attach a paper pattern to the block of wood.

RUBBER CEMENT. One way to do this is with rubber cement (available from any art supply store). Rubber cement produces a quick, strong bond between paper and wood, but it's not so strong that it can't be easily scraped off the wood after the pattern is cut. Also, rubber cement doesn't soak into the wood (which would goof up the finish) as a normal glue does.

Using rubber cement is easy. It comes in an old-fashioned metal can that includes a brush built into the lid. Simply apply a thin layer on the workpiece, let it stand for a minute or so (the longer you wait before applying the pattern, the stronger the bond), and then apply the paper pattern.

Any excess cement that oozes out around the edges of the pattern can be removed by simply rubbing it off with your finger.

SPRAY MOUNT. If rubber cement has a

disadvantage, it's that it's too close to being permanent. When we want to put down a pattern and still be able to pick it up to reposition it, or completely remove it, we use Spray Mount or Photo Mount.

These are spray adhesives that come in aerosol cans. Photo Mount is available in most photo stores and is formulated to mount photos in photo albums. It has fairly good paper-to-paper tack but it's less strong paper-to-wood. (This is actually an advantage when it comes time to remove the pattern).

Spray Mount is used by graphic artists to paste down art that may have to be moved and repositioned frequently. It has even less tack, but still works well for temporarily attaching patterns to wood.

When using either of these spray adhesives, simply spray it on the back side of the pattern, wait about a minute for the adhesive to set up, and then press the pattern onto the workpiece.

CARPET TAPE. Another type of adhesive we use is double-sided carpet tape. I've found this tape particularly useful whenever duplicate parts are being cut to shape on the band saw.

By simply taping the two pieces together, and cutting or sanding them as one, the profile on both pieces will be exactly the same. When the pieces are complete, the double-faced tape can be easily removed.

(Editor's Note: Rubber cement, Spray Mount, and double-faced tape provide enough strength for attaching paper patterns, or for cutting duplicate parts on a band saw. However, they *do not* have enough holding power to secure two pieces of wood well enough for use on a table or radial arm saw.)

GLUING UP BOARDS

In your article on edge gluing, Woodsmith *No. 32, you pointed out that the edges of the boards to be glued-up must be straight and exactly perpendicular to the face of the board. Unfortunately, most of us have found that exactly perpendicular is an elusive quality to achieve using table saws in the affordable range.*

However, there's a method for cutting the boards that actually cancels out any minor inaccuracies in the angle of the blade. This method allows the blade to be slightly out of square, and still produces a perfectly flat surface after joining the pieces.

If the blade is off square a little when the joint is cut, say it's at 89°, then the edge will be cut at an 89° angle if measured from one face, but it's 91° (the complimentary angle) if measured from the other face. The trick is to use this to your advantage. If alternate pieces are flipped upside down before they're cut, the angles produced will still total 180° (89° plus 91°).

There's an easy way to do this without getting totally confused in the process. First, lay out the boards in their final positions, and mark each board with an arrow pointing in the same direction. Then rip the boards to final width, always feeding the boards through the saw in the direction of the arrows.

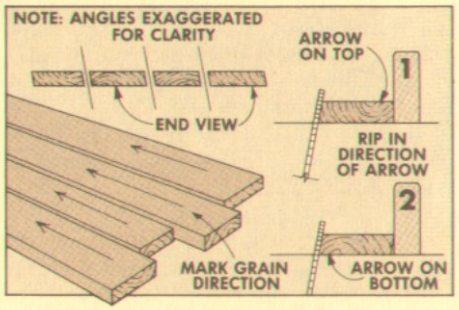

One edge of each board is cut with the arrow face up. But to cut the second edge, the board must be turned face down to feed it in the direction of the arrow.

This technique will not work when the angle of the blade is grossly out of square — the boards will slip during gluing. But when the blade is set as close to 90° as possible, there shouldn't be any slippage.

Dave Waycie
Madison, Wisconsin

TABLE SAW INSERT

One table saw accessory we use regularly is a wooden table saw insert. This shop-built version is a necessary replacement for the standard metal insert for some types of cuts.

The problem with the standard metal inserts that come with the table saw is that they have too large an opening around the blade. This makes it difficult to rip a narrow piece of stock without the piece falling down into the opening, which can create a real safety problem.

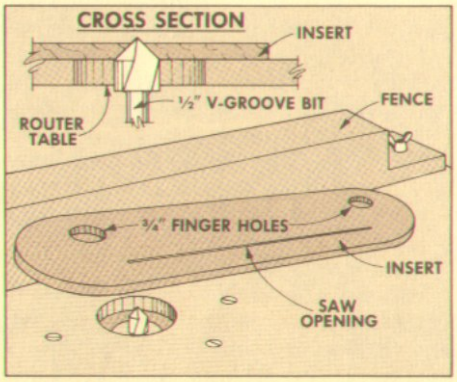

The alternative is to cut a new insert out of wood. Resaw a piece of wood to fit the recess in the table so it's perfectly flush with the surface of the table, and cut to shape so there's no play from side to side.

Then to cut the slot for the blade, lower the blade completely. Position the insert in the recess, and hold it in place by clamping another board over the insert. Then turn on the saw and slowly raise the blade to its maximum height. This will cut an opening that's only as wide as the blade itself, and provides support for the work piece right up to the blade.

Although we've used this type of insert for quite some time, I ran into a slightly different angle to the problem as I was cutting the bevel on some of the toy parts for this issue. Several pieces had to be bevel ripped, some with only an ⅛" of stock riding on the table surface.

The problem is that for a bevel rip, the blade has to be set at an angle. This means the wooden insert needs a slight modification to allow enough clearance on the bottom side of the insert for the tilt of the blade. I cut a V-shaped recess directly under the opening in the insert using a V-groove bit on the router table, see drawing. The V-groove allows enough clearance underneath the insert for the blade, yet the opening on the top of the insert remains only as wide as the blade itself.

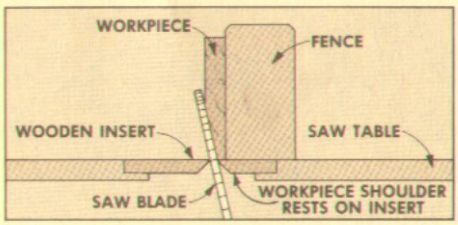

THE MISSING KEY

I wanted to comment on your article on palm sanders in Woodsmith *No. 33. I've used the Rockwell Speed Bloc for many years with great success.*

You mentioned the problem of losing the wrench. I've had the same problem, and have tried several different approaches to keep track of it, including trying to weld it to a chain.

I finally gave up trying to keep track of the key and have found it's just as easy to use a good ol' slot-head screwdriver to release the clamps while changing paper.

Larry Poulson
Twin Lakes, Minnesota

Editor's Note: We've had several other letters suggesting the wrench be tied to the cord of the sander, much like a chuck key is attached to the cord of a drill.

Initially, this sounded like a good idea, but if the wrench is attached to the cord, there's always the chance that it will bang into, and dent the project as the sander is being used.

I, too have given up the search for my missing sander key, and like Larry use a screwdriver to change sandpaper on the Porter-Cable Speed Bloc.

Sources

TRUCK PARTS

All of the parts for the truck are from the Woodcraft Supply catalog:

Wooden wheels, 2" dia., 7/16" thickness, 1/8" axle hole, Order No. 50N31-PJ, $3.25 ppd. for package of 12. *Wooden wheel for steering wheel*, 7/8" dia., 1/4" thickness, 1/4" axle hole, Order No. 50S21-PJ, $1.75 ppd. for pkg. of 12. *Barrels*, 1 1/8" dia., 1 5/8" high, Order No. 50H42-BJ, $2.75 ppd. for pkg. of 10.

AIRPLANE PARTS

All of the parts for the airplane are from the Woodcraft Supply catalog:

Wooden wheels, 1 1/2" dia., 1/2" thickness, 1/4" axle hole, Order No. 50S51-PJ, $2.50 ppd. for pkg. of 12. *Wooden wheel pins* (for 1/4" axles), 1 1/4" long, Order No. 50Q31-PJ, $2.25 for pkg. of 12. *Wooden people* to fit 3/4" hole, Order No. 50P21-PJ, $2.55 for pkg. of 10.

PATTERN. If you would like the patterns for the airplane's fuselage, send for Airplane Pattern #35. There's no charge for the pattern. Send to: Woodsmith, 2200 Grand Ave., Des Moines, IA 50312.

COFFEE MILL

The coffee mill mechanism is available from two different sources:

The Woodworkers' Store: Coffee Mill Mechanism, Order No. F1130, $16.95.

Woodcraft Supply: Coffee Mill Mechanism, Order No. 07V41-KR, $14.95 ppd.

The 3/4" Porcelain Knob is available from Horton Brasses, Order No. PK-1, 3/4", $1.25 each. The 3/4" porcelain knob should also be available from most local hardware stores.

CARDBOX

Felt discs for the bottom of the cardbox are available from either of the following:

Woodcraft Supply: 3/8" felt discs, 48 per roll, Order No. 04A51-LB, $1.95 ppd.

The Woodworkers' Store: Feltdots, 3/8" dia., Order No. D1711, $.39 per 10.

CATALOG ADDRESSES

Woodcraft Supply Corp.: 41 Atlantic Avenue, Box 4000, Woburn, MA 01888; 800-225-1153. Note: $10 minimum order. Catalog: $3.00.

The Woodworkers' Store: 21801 Industrial Boulevard, Rogers, MN 55374; 612-428-4101. Note: $7.50 minimum cash order. Catalog $2.00.

Horton Brasses: Nooks Hill Road, P.O. Box 95, Cromwell, CT 06416; 203-635-4400. Note: $10 minimum order. Catalog: $2.00.

WOODWORKING CLUBS

We keep hearing from more clubs that are forming all over the country. Here are the latest additions.

NORTH TEXAS WOODWORKERS' GUILD. This group was started in April of 1983 and now has over 80 members. They recently held a show at the Northpark Center in Dallas. For more information contact Bill Holmes, 3232 Purdue, Dallas, TX 75225.

OLD CAPITAL WOODCRAFTERS. William C. Simpson reports that this group serves the "Heart of Georgia." They are interested in hearing some program ideas from better established clubs. Contact William C. Simpson, President, 106 Sweetgum Dr. NE, Milledgeville, GA 31061.

AUGUSTA WOODWORKERS' GUILD. From William R. Wagner comes word that this club has been in existence for over two years and has an informal group of 45 to 50 members. Get more information by writing William R. Wagner, Recording Secretary, Box 15, Augusta, MO 63332.

ALBUQUERQUE WOODWORKERS' ASSOCIATION. William Pike reports that his group of about 55 woodworkers has informative monthly meetings as well as offering a series of demonstration-lectures. For more information contact William Pike, 615 Mission NE, Albuquerque, NM 87107.

CENTRAL PENNSYLVANIA WOODWORKERS. Robert Van Allen reports that this group is serving the needs of woodworkers around Williamsport. For more information contact Robert Van Allen, Club Coordinator, 2200 Fox Street, Williamsport, PA 17701.

WOODWORKING CLUB IDEAS

It is exciting for us to hear from woodworking clubs and the variety of activities they are involved in. Perhaps your group is just getting started or even well established and you need to bring some new life into it. We'd like to use this page from time to time to offer a few suggestions. These are ideas that have worked for other clubs, and if you have some ideas that have worked for your group, send them in to us here at *Woodsmith*.

Kishwaukee Woodworkers in DeKalb, Illinois spent much of their spare time in October and November building wooden toys as a service project. The toys were then donated to the local Salvation Army for distribution at Christmas time.

Their approach was to meet with the Salvation Army people and determine the needs in their area (i.e. number of boys, girls, ages, families, etc.) and then begin planning. In any group of woodworkers there are those who would rather work alone as well as those who like to get together and do group mass-production work. Kishwaukee Woodworkers eagerly accepted the services of both.

Many of the members chose to make more difficult toys in their home shops (such as those shown in this issue). Also, a committee of the club was formed to design and plan simple, mass-produced toys that could be built with cutoffs or scraps. Jigsaw puzzles were made out of two pieces of Masonite. One piece had a Santa design printed on it. The Santa was cut out of the middle on a jigsaw, and the remaining background piece was glued to the other piece of Masonite to form a puzzle tray. Small cars, trucks, and animal shapes were made out of 2x4 scraps and cut out on the bandsaw. Holes were drilled into the top of some of them to hold crayons.

One member designed an entire block set that could be cut from a single 2x4. Hundreds of small blocks were cut from scrap 2x2, dipped in a watered-down latex paint bath, spread to dry, and then bundled into plastic seal-top bags. Templates and easy-to-operate holding jigs were made to produce items such as airplanes and doll cradles. With these jigs even the beginning woodworkers could help by simply loading a part in and pushing it across the saw.

Lumberyards, builders, industries, and scrap bins were scrounged for donations or cutoffs. The local high school woodworking teacher agreed to allow much of the mass-production work to be done in the school shop. The high school graphic arts classes were solicited to silk screen the puzzles and the home economics classes to make blankets for the doll cradles.

All of the projects were gathered together for exhibition at the December club meeting and then donated. A display was also put up in the library and an article in the local newspaper resulted in some very positive public relations for the club.

The only problem with this Christmas project was that a lot of community people wanted to *buy* the toys once they saw them! The club decided to donate the toys but did offer copies of the patterns.

There are a lot of good sources for simple toy patterns that could be individually made or mass-produced. Both The Toymaker Supply Co. and Cherry Tree Toys, Inc. (listed below) have patterns.

The Toymaker Supply Company: 2907 Lake Forrest Rd., Box 5459, Tahoe City, CA 95730; 800-824-5897. Catalog: $1.00.

Cherry Tree Toys, Inc.: Belmont, OH 43718; 614-484-1746, Catalog: $1.00.